Really Right Stuff®
1146 Farmhouse Lane, San Luis Obispo, CA 93401 USA
1-805-528-6321 | 1-888-777-5557
www.ReallyRightStuff.com

LEVER RELEASE CLAMPS

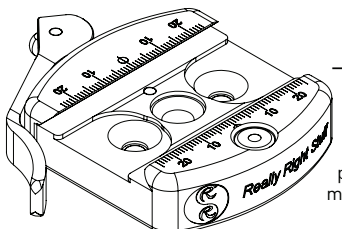

CLAMP ID

B2 LR II pictured; models vary.

SPECIFICATIONS:

Jaws Lengths ..... 2.0"(50mm), 2.4"(60mm), or 3.1"(80mm)

Width of most LR clamps (including lever).....3.4"/86mm

Weight.....varies from 3.9 - 10.4oz (111-296g)

Available lever-release models include B2 LR II, B2 AS II, B2-40 LR, FAS, B2 LLR II, PG-CC, and B2 LR VC. Models vary in jaw length and features. Models with non-threaded center holes include mounting screw and hex key.

KEY FEATURES:

Top View:

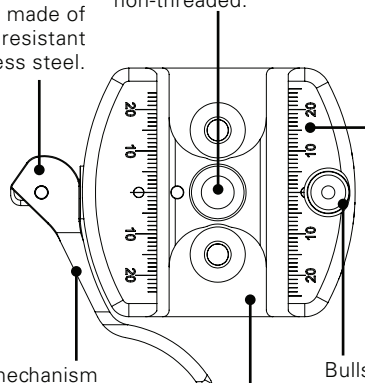

All mounting holes have countersink. Some models have center hole threaded 3/8"-16, some models are non-threaded.

Lever made of corrosion resistant stainless steel.

Laser engraved scale in 1mm increments (not on all models).

Cam mechanism boosts holding power up to 50lbs on Really Right Stuff plates.

Bullseye spirit level for quick leveling (not on all models).

Relief grooves allow greater adjustment for plates with safety stops.

Bottom View:

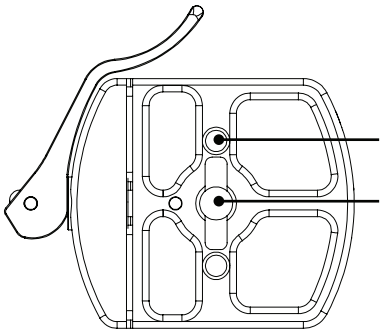

Additional mounting holes threaded ¼"-20 (not on all models).

Center hole is keyed; some clamps have single groove, some have double groove.

GUARANTEE

ALL REALLY RIGHT STUFF BRAND PRODUCTS ARE GUARANTEED TO THE ORIGINAL PURCHASER TO BE FREE OF DEFECTS IN MATERIALS OR WORKMANSHIP FOR FIVE (5) YEARS FROM THE DATE OF PURCHASE. PRODUCTS WILL BE REPAIRED OR REPLACED AT OUR OPTION.

® , ™, © 2013 Really Right Stuff, LLC. All rights reserved.

USING YOUR CLAMP

Your Lever-Release clamp has 3 distinct positions.

1. **Fully Open**: Open lever to the fully open position and you can quickly top-load your quick-release plates.

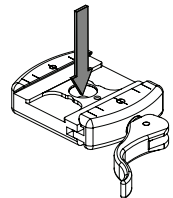

2. **Halfway Open**: With your quick-release plate engaged in the clamp, flip the lever to the halfway open position. Your plate freely slides in the clamp, but can't be lifted out. Use the handy laser-engraved index marks on the clamp jaws for precision positioning.

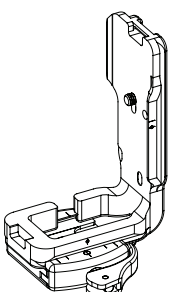

3. **Fully Closed**: The graceful stainless steel lever has a very positive "snap" feel when fully closed with a quick-release plate engaged. This gives assurance that the plate was properly loaded and locked in place. In the closed position, the lever closely hugs the contours of the clamp.

CARE AND MAINTENANCE

The stainless steel lever delivers a lifetime of wear and rides on a self-lubricating, wear resistant bronze bearing surface. From time to time, we recommend placing a drop of lubricant on the shaft to prevent the stainless steel and bronze washers from binding. If you find that your lever-release clamp is not closing as smoothly as it used to, simply open the clamp to the fully open position, squeeze the jaws together, blow out any dirt or grit, and place a drop of lubricant on the shaft.