Really Right Stuff®
1146 Farmhouse Lane, San Luis Obispo, CA 93401 USA
1-805-528-6321 | 1-888-777-5557
www.ReallyRightStuff.com

BH-25 BALLHEAD

BALLHEAD ID: _____

SPECIFICATIONS:

Load Capacity.....8.8 pounds (4kg)

Ball Articulation.....±45°, 90° notch

Tension Adjustment.....via Main Lock T-lever

Height of BH-25 Pro.....2.6″ (66mm)

Tripod Mount.....Stainless Steel 3/8″-16

Base Diameter.....1.3″ (33mm)

Ball Diameter.....1.0″ (25mm)

Weight of BH-25 Pro.....6.5 ounces (185g)

Main Lock T-Lever.....Spring loaded & repositionable

KEY FEATURES

BH-25 Pro Shown Below

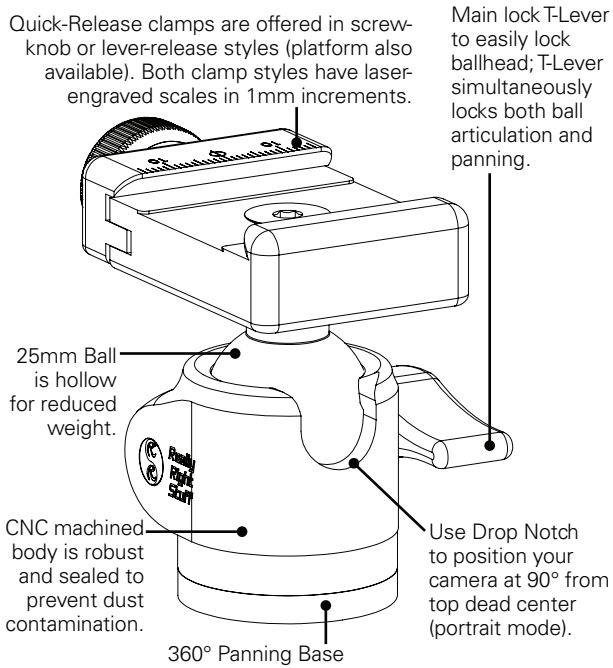

MODELS

The BH-25 ballhead is available with a Really Right Stuff quick-release clamp or a flat platform; also available without clamp or platform.

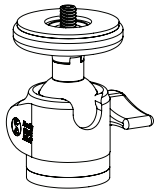

BH-25 PF

Head comes with flat platform with ¼″-20 threaded stud for direct mounting of camera. Platform diameter = 1½ inches (38mm); fitted with cork bed to provide snug fit of camera.

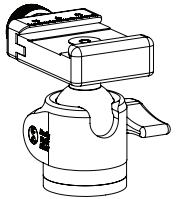

BH-25 Pro

Head comes with B2-mAS quick-release clamp secured with ¼″-20 flat head screw. Clamp accepts most Arca-Swiss compatible plates (not Novoflex). Purchase plates separately.

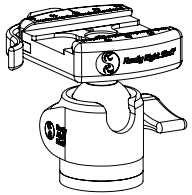

BH-25 LR

Head comes with B2-40 LR quick-release clamp secured with ¼″-20 flat head screw. Clamp accepts all Really Right Stuff quick-release plates. Purchase plates separately.

MAINTENANCE

General Care

The BH-25 is finished with a protective anodize plating that protects the aluminum from corrosion and mild abrasion. It will not protect it from scraping against or dropping on rocks/concrete/etc.

Cleaning

Take precautions to prevent your BH-25 from getting fouled in mud, dirt, or sand. If the BH-25 is fouled, dry dust and dirt can be blown off and/or wiped off with a soft cloth. Mud or salt water should be lightly rinsed off with fresh water and then thoroughly dried. If fine sand/grit fouls the knob, simply run a gentle stream of water around the knob while rotating it one-half turn back and forth. Do NOT submerge the ballhead and do not direct a high-pressure stream of water at it.

GUARANTEE

ALL REALLY RIGHT STUFF BRAND PRODUCTS ARE GUARANTEED TO THE ORIGINAL PURCHASER TO BE FREE OF DEFECTS IN MATERIALS OR WORKMANSHIP FOR FIVE (5) YEARS FROM THE DATE OF PURCHASE. PRODUCTS WILL BE REPAIRED OR REPLACED AT OUR OPTION.

® , ™, © 2014 Really Right Stuff, LLC. All rights reserved.

INSTALL TO TRIPOD

1. Tighten the Main Lock T-Lever to lock the Panning Base.
2. Screw the ballhead onto the 3/8”-16 threaded stud on the top of the tripod (stud should not protrude more than 3/8” above platform or 5-6 threads). Tighten the ballhead onto the tripod snugly, but do not over-torque or it will be difficult to remove.

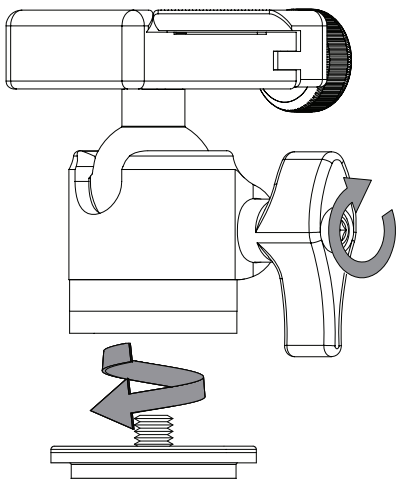

USING THE MAIN LOCK T-LEVER

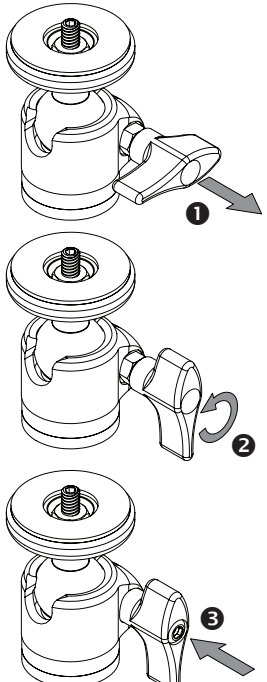

The Main Lock T-Lever is longer on one end. This design makes it easy to turn the lever and apply enough pressure to solidly lock the head. In some instances, though, the long end of the lever may hit the tripod platform or even the clamp. That’s why we made the main lock T-Lever spring loaded and re-positionable:

1. Pull the T-Lever out.
2. Rotate T-Lever to a new position. The T-Lever actually drives an internal six-sided hex nut, so there are 6 possible positions for the T-Lever.
3. Allow T-Lever to snap into place.