Really Right Stuff®
1146 Farmhouse Lane, San Luis Obispo, CA 93401 USA
1-805-528-6321 | 1-888-777-5557
www.ReallyRightStuff.com

BHERO3-B GoPro® BUCKLE ADAPTER PLATE

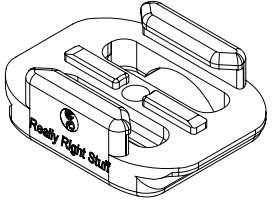

SPECIFICATIONS: BHERO3-B

Weight.....0.8 ounces (20g)

Material..... machined from 6061-T6 aluminum

This adapter plate enables connection between GoPro buckle mount and Really Right Stuff dovetail and X-Jaw clamps.

FEATURES

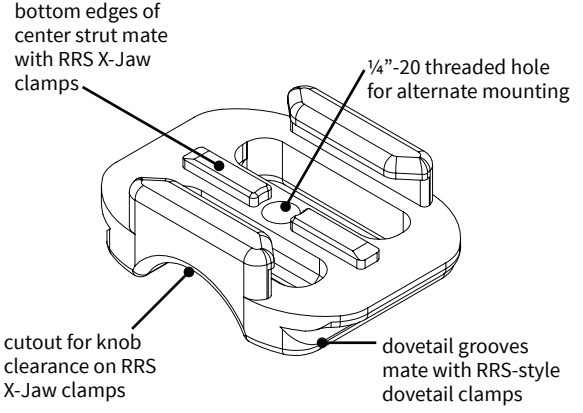

INSTALLATION

Before installing GoPro buckle, wipe it clean to prevent trapping dirt or grit. Slide the GoPro buckle into the adapter plate. The buckle will fit into the adapter plate from either direction. Ensure that buckle is fully engaged before using. To remove, squeeze the arm ends of the buckle together and press firmly to slide buckle out of the plate.

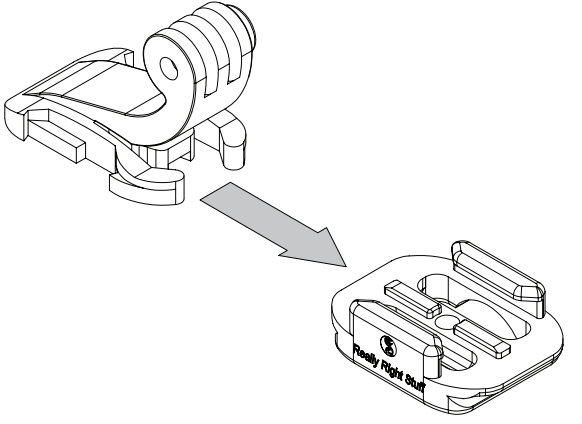

MAINTENANCE

Periodically check mount to make sure it is tightly installed. Periodically wipe plate and quick-release clamp clean with a dry cloth to remove any contamination.

GUARANTEE

All Really Right Stuff brand products are guaranteed to the original purchaser to be free of defects in materials or workmanship for five (5) years from the date of purchase. Products will be repaired or replaced at our option.

® , ™, © 2014 Really Right Stuff, LLC. All rights reserved. Third party marks references are the property of their respective owners.

MOUNTING IN DOVETAIL CLAMP

Open the clamp jaws, then align the plate dovetails with the clamp jaws as shown. Mount BHERO3-B adapter plate into clamp & close clamp jaws. Image below demonstrates mounting with a Really Right Stuff lever-release clamp, but BHERO3-B plate fits any Arca-style quick-release clamp.

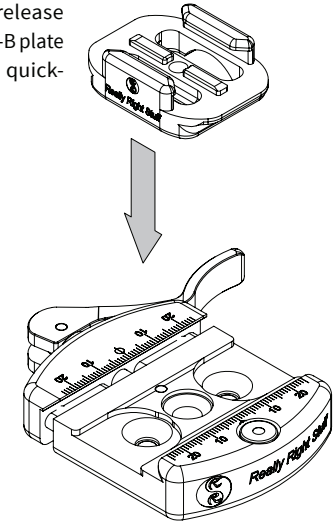

MOUNTING IN X-JAW CLAMP
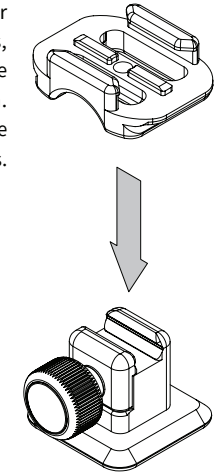
Really Right Stuff X-Jaw clamps accept mobile device cases made by Really Right Stuff. They are available in a variety of configurations; clamp shown below is B2-XJ1 with dovetail base. X-Jaw clamps also accept the BHERO3-B adapter plate. Open the clamp jaws, then align middle strut of plate with clamp jaws as shown. Mount BHERO3-B adapter plate into clamp & close clamp jaws.