Really Right Stuff®
1146 Farmhouse Lane, San Luis Obispo, CA 93401 USA
1-805-528-6321 | 1-888-777-5557
www.ReallyRightStuff.com

QUICK COLUMNS FOR VERSA TRIPODS
TA-3-QC FOR SERIES 3 / TA-2-QC FOR SERIES 2

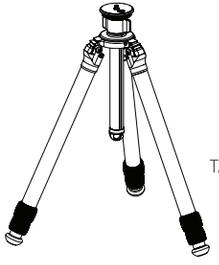

TA-3-QC
in TVC-33
Versa Tripod

SPECIFICATIONS:

Weight TA-3-QC / TA-2-QC.....12.7oz (361g) / 9.1oz (257)g

Length TA-3-QC / TA-2-QC.....15" (381mm) / 12.25" (311mm)

Total Travel TA-3-QC / TA-2-QC.....12.5" (318mm) / 9.4" (239mm)

Material.....6061-T6 Aluminum

*TVC-33 tripods purchased prior to October 2010 cannot use TA-3-QC. Instead, buy quick column model TA-3-QCH which includes the tripod platform and weight hook.

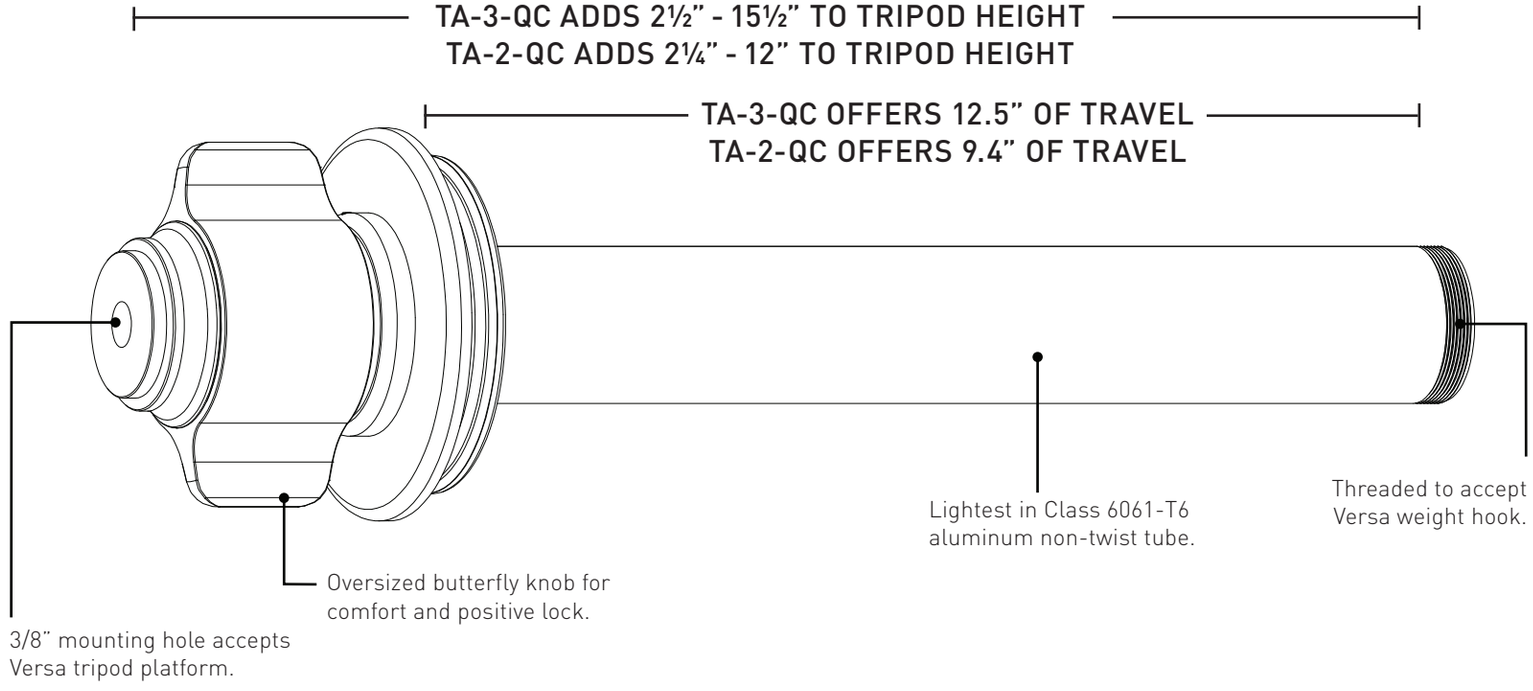

MAINTENANCE

GENERAL CARE

The quick column is finished with a protective anodize plating that protects it from corrosion and mild abrasion. It will not protect it from scraping or dropping on rocks/concrete/etc. Take precautions to prevent your quick column from getting fouled in mud, dirt, or sand, especially inside the butterfly knob.

CLEANING

Lightly rinse mud or salt water with fresh water and then thoroughly dry. If fine sand/grit fouls the assembly, separate the quick column from the tripod, pull out the tube, and rinse both under a gentle stream of water, then thoroughly dry.

LUBRICATION

NO LUBRICATION IS REQUIRED BY THE USER. Just keep the components free from contamination to maintain smooth action.

GUARANTEE

ALL REALLY RIGHT STUFF BRAND PRODUCTS ARE GUARANTEED TO THE ORIGINAL PURCHASER TO BE FREE OF DEFECTS IN MATERIALS OR WORKMANSHIP FOR FIVE (5) YEARS FROM THE DATE OF PURCHASE. PRODUCTS WILL BE REPAIRED OR REPLACED AT OUR OPTION.

® , ™, © 2014 Really Right Stuff, LLC. All rights reserved.

1 Remove Versa Platform & Hook

(A) Unscrew and remove Versa weight hook.
(B) Use a 1/8" hex key (included with Versa tripod) to loosen, but not remove, all three SureGrip™ set screws. NOTE: Expect some resistance when loosening/tightening screws.
(C) Remove platform by pulling up.

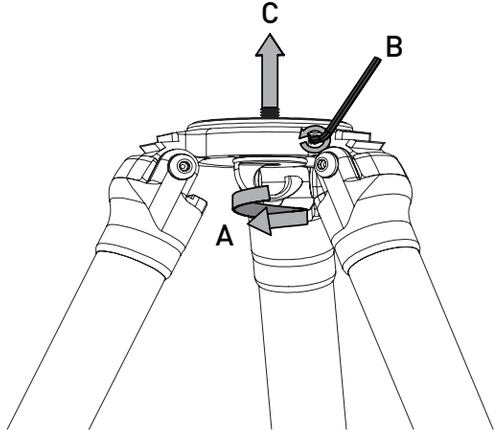

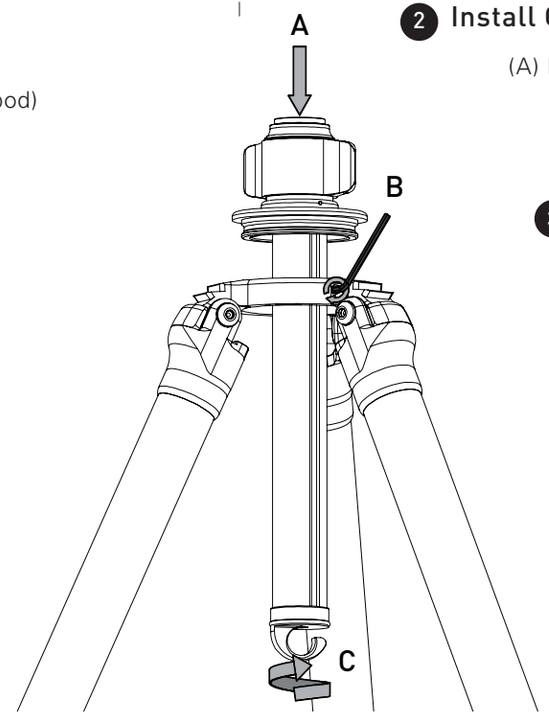

2 Install Quick Column

(A) Insert Quick Column assembly into tripod apex. (B) Make sure it is fully seated, then tighten all three SureGrip™ set screws. (C) Reattach Versa weight hook to bottom of tube.

3 Install Versa Platform
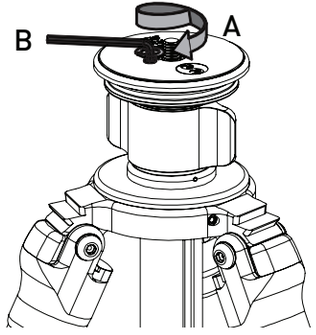
(A) Screw Versa tripod platform onto top of column and hand tighten.
(B) Insert and hand tighten included set screw.