Really Right Stuff®
1146 Farmhouse Lane, San Luis Obispo, CA 93401 USA
1-805-528-6321 | 1-888-777-5557
www.ReallyRightStuff.com

VERSA SERIES 2 LEVELING BASE

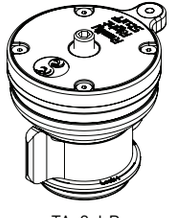

TA-2-LB
with platform

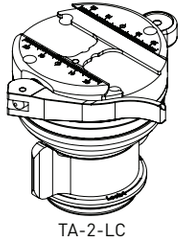

TA-2-LC
with clamp

SPECIFICATIONS

Degrees of Leveling.....15° in any direction

Load Capacity.....35 pounds (16kg)

Total Height with Platform / Clamp.....2.8" (72mm) / 3¼" (82mm)

Added Height to Versa Tripod.....2.1" (54mm) / 2½" (64mm)

Weight with Platform / Clamp.....11.6 oz (330g) / 14.1 oz (399g)

TA-2-LB with Platform:
For direct mounting of a tripod head.

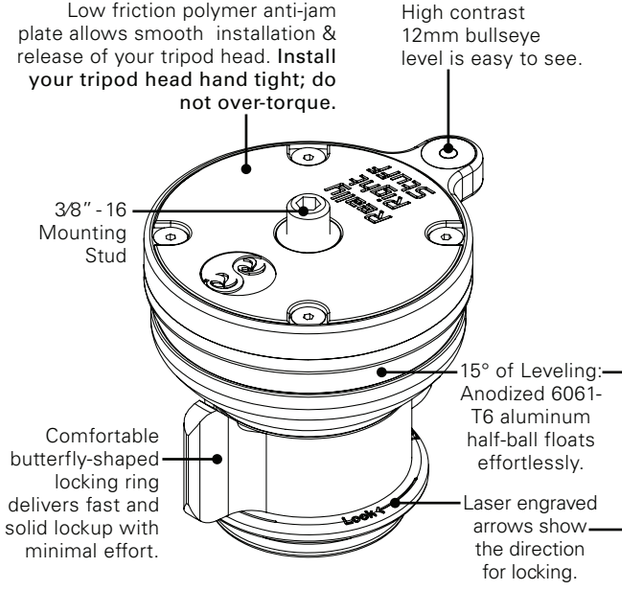

TA-2-LC with Lever-Release Clamp:
Allows fast swapping between different heads.*

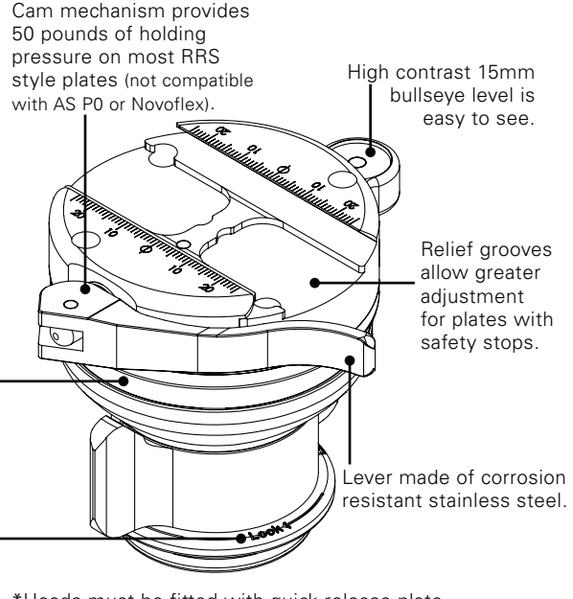

*Heads must be fitted with quick-release plate.

Platform or Clamp?

The leveling base comes with either a platform or a patented lever-release clamp. The platform is perfect for direct mounting of a tripod head. The clamp facilitates quick swapping from one head to another. For example, switch quickly from your ballhead to your gimbal head or video head.

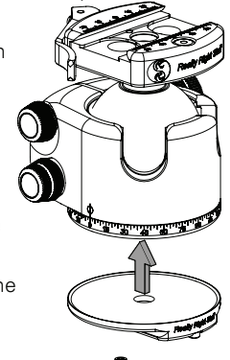

Add TH-DVTL

Each head you want to swap needs a quick-release plate. For round bases, our TH-DVTL plates are ideal and come in two sizes.

Install Clamp

If you purchased the leveling base with platform, but wish to add the clamp, the exchange is easy. Use hex key* to remove platform, then use hex key and screws* to install clamp.

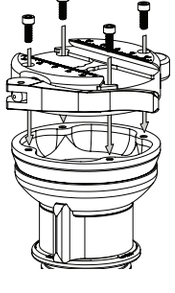

*Hex keys & screws included when clamp is purchased separately. Partially open clamp jaw in order to properly align hole in moving jaw with mounting hole underneath.

1. To remove platform from any Versa tripod, use ⅛" hex key (included with tripod) to loosen **all three** SureGrip™ set screws around Apex. Two rotations are sufficient; complete removal is not required. *NOTE: Medium-strength thread locking compound was applied to set screw threads to prevent accidental loosening. Expect some resistance when loosening/tightening screws.*
2. Remove Apex platform by pushing it upward.

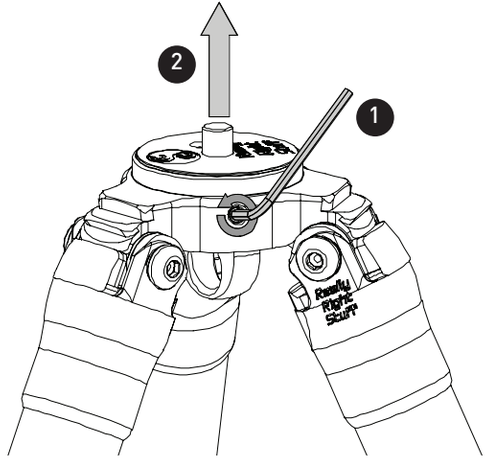

3. Insert leveling base. Make sure it's fully seated in the Apex.
4. Tighten all three SureGrip™ set screws, then re-install hook.

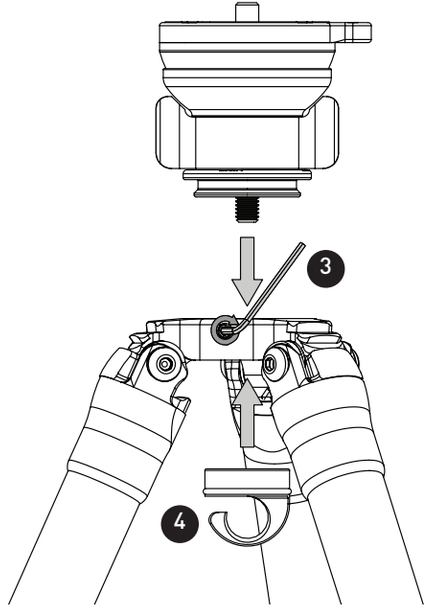

Install to Center Column

The leveling base can be installed on all Versa Quick Columns (TA-3-QC or TA-2-QC) as well as Gitzo Series 2 center columns.

To install leveling base to a Versa Quick Column, use ⅛" hex key (incuded with Quick Column) to remove Quick Column platform set screw. Unscrew platform from Quick Column (save platform & set screw for possible future use).

Screw leveling base to top of Quick Column. To secure leveling base in place, we strongly recommend using a few drops of non-permanent threadlocker fluid (LocTite 242) on the mounting stud; allow to cure overnight. Single applications of LocTite 242 are available from our web site.

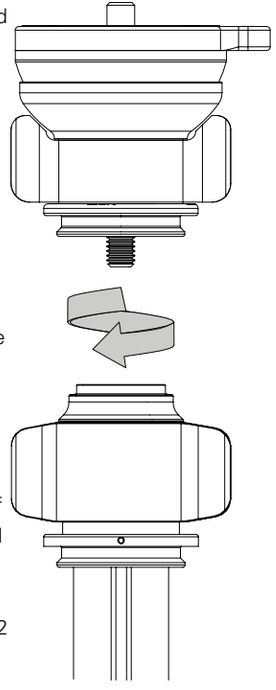

MAINTENANCE

General Care

The leveling base is anodized to protect against corrosion and mild abrasion. It will not protect the leveling base from scraping or dropping on rocks/concrete/etc. Take precautions to prevent your leveling base from getting fouled in mud, dirt, or sand.

Cleaning

Lightly rinse mud or salt water under a gentle stream of fresh water, then thoroughly dry.

Lubrication

NO LUBRICATION IS REQUIRED BY THE USER. Just keep the components free from contamination to maintain smooth action.

GUARANTEE

ALL REALLY RIGHT STUFF BRAND PRODUCTS ARE GUARANTEED TO THE ORIGINAL PURCHASER TO BE FREE OF DEFECTS IN MATERIALS OR WORKMANSHIP FOR FIVE (5) YEARS FROM THE DATE OF PURCHASE. PRODUCTS WILL BE REPAIRED OR REPLACED AT OUR OPTION.

® , ™, © 2014 Really Right Stuff, LLC. All rights reserved.