Really Right Stuff®
1146 Farmhouse Lane, San Luis Obispo, CA 93401 USA
1-805-528-6321 | 1-888-777-5557
www.ReallyRightStuff.com

VERSA SERIES 3 LEVELING BASES

TA-3-LB-HK with platform & hook

TA-3-LB with platform

TA-3-LHDL replacement long handle with hook

TA-3-LC with clamp

TA-3-LC-HK with clamp & hook

SPECIFICATIONS

Degrees of Leveling	15° in any direction
Load Capacity	25 pounds (11.3kg)
Added Height with Platform / Clamp	0.9" (20mm) / 1.1" (29mm)
Length of Handle: without hook/with hook	2.9" (74mm) / 4.75" (121mm)
Weight	varies from 11.5 oz (325g) to 15.6 oz (442g)

TA-3-LB / TA-3-LB-HK with Platform*: For direct mounting of a tripod head.

Want the option of a handle with a hook, yet retain the near ground-level drop of the short handle? Purchase leveling base with short handle and then add TA-3-LHDL replacement handle with hook.

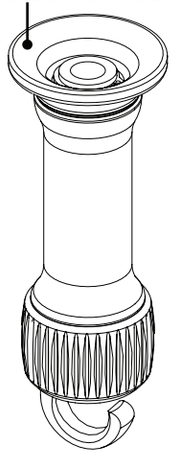

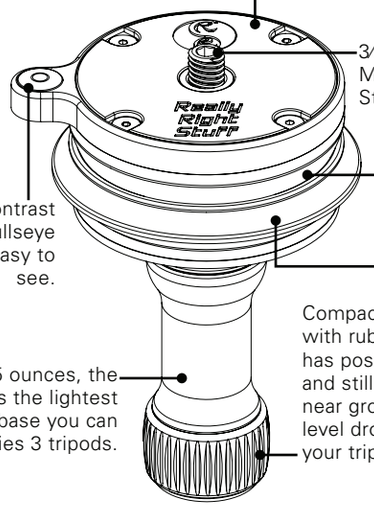

Low friction polymer anti-jam plate allows smooth installation & release of your tripod head. **Install your tripod head hand tight; do not over-torque.**

3/8" - 16 Mounting Stud

High contrast 12mm bullseye level is easy to see.

At only 11.5 ounces, the TA-3-LB is the lightest leveling base you can buy for Series 3 tripods.

Compact handle with rubber grip has positive lock and still allows near ground-level drop for your tripod.

*If you purchased the leveling base with platform, but wish to replace it with the clamp, purchase TA-LBC separately (**please review installation process prior to purchase**).

TA-3-LC / TA-3-LC-HK with Lever-Release Clamp: Allows fast swapping between different heads.*

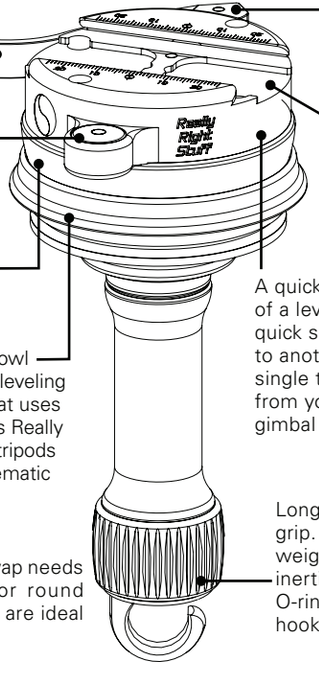

Cam mechanism provides 50 pounds of holding pressure on most RRS style plates (not compatible with AS P0 or Novoflex).

Lever made of corrosion resistant stainless steel.

High contrast 15mm bullseye level is easy to see.

Relief grooves allow greater adjustment for plates with safety stops.

15° of Leveling: Anodized 6061-T6 aluminum half-ball floats effortlessly.

A quick-release clamp on top of a leveling base facilitates quick swapping from one head to another. Now you can use a single tripod and switch quickly from your ballhead to your gimbal head or video head.

TA-3-VB 75mm video bowl included. Use with TA-3-LB leveling base or other accessory that uses 75mm bowl. Video bowl fits Really Right Stuff Series 3 Versa tripods and Gitzo® Series 3 Systematic Tripods.

Longer handle is easier to grip. Integrated hook allows weight to hang and increase inertia of the tripod. APB O-ring keeps removable hook secure.

*Each head you want to swap needs a quick-release plate. For round bases, our TH-DVTL plates are ideal and come in two sizes.

1. To remove platform from Versa tripod, use ⅛" hex key (included with tripod) to loosen **all three** SureGrip™ set screws around Apex. Two rotations are sufficient; complete removal is not required. *NOTE: Medium-strength thread locking compound has been applied to set screw threads to prevent accidental loosening. Expect some resistance when loosening/tightening screws.*
2. Remove Apex platform by pushing it upward.

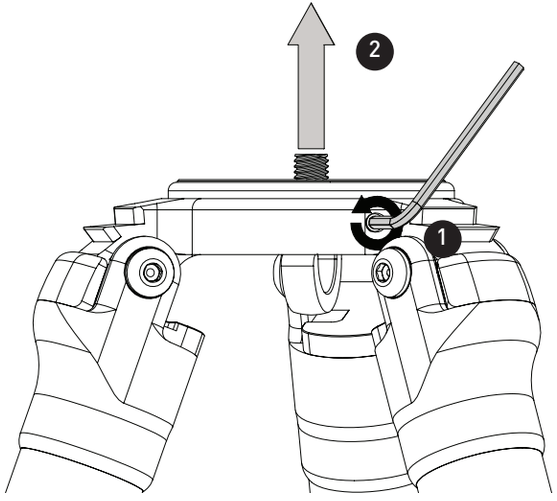

3. Insert TA-3-LB leveling base with its video bowl into the Apex. Make sure it is fully seated.
4. Tighten all three SureGrip™ set screws.

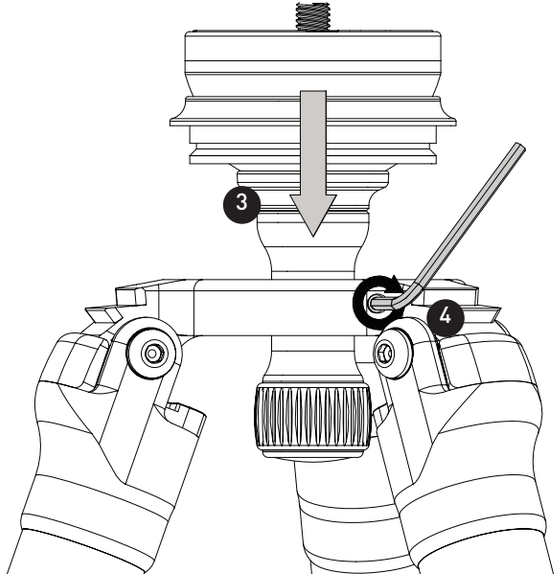

MAINTENANCE

General Care

The leveling base is finished with a protective anodize plating that protects it from corrosion and mild abrasion. It will not protect it from scraping or dropping on rocks/concrete/etc. Take whatever precautions you can to prevent your leveling base from getting fouled in mud, dirt, or sand, especially between the leveling base and the video bowl.

Cleaning

Lightly rinse mud or salt water with fresh water and then thoroughly dry. If fine sand/grit fouls the video bowl, separate the leveling base from the bowl and rinse under a gentle stream of water, then thoroughly dry.

Lubrication

NO LUBRICATION IS REQUIRED BY THE USER. Just keep the components free from contamination to maintain smooth action.

GUARANTEE

ALL REALLY RIGHT STUFF BRAND PRODUCTS ARE GUARANTEED TO THE ORIGINAL PURCHASER TO BE FREE OF DEFECTS IN MATERIALS OR WORKMANSHIP FOR FIVE (5) YEARS FROM THE DATE OF PURCHASE. PRODUCTS WILL BE REPAIRED OR REPLACED AT OUR OPTION.

® , ™, © 2014 Really Right Stuff, LLC. All rights reserved.