Fowler®

FUSION

COORDINATE MEASURING MACHINES

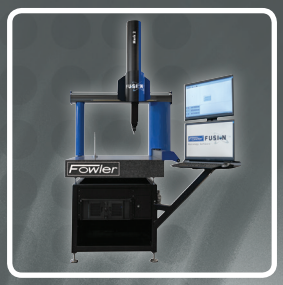

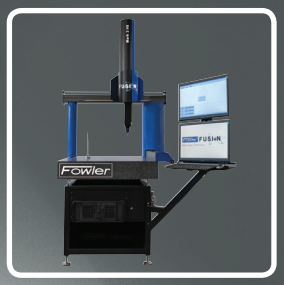

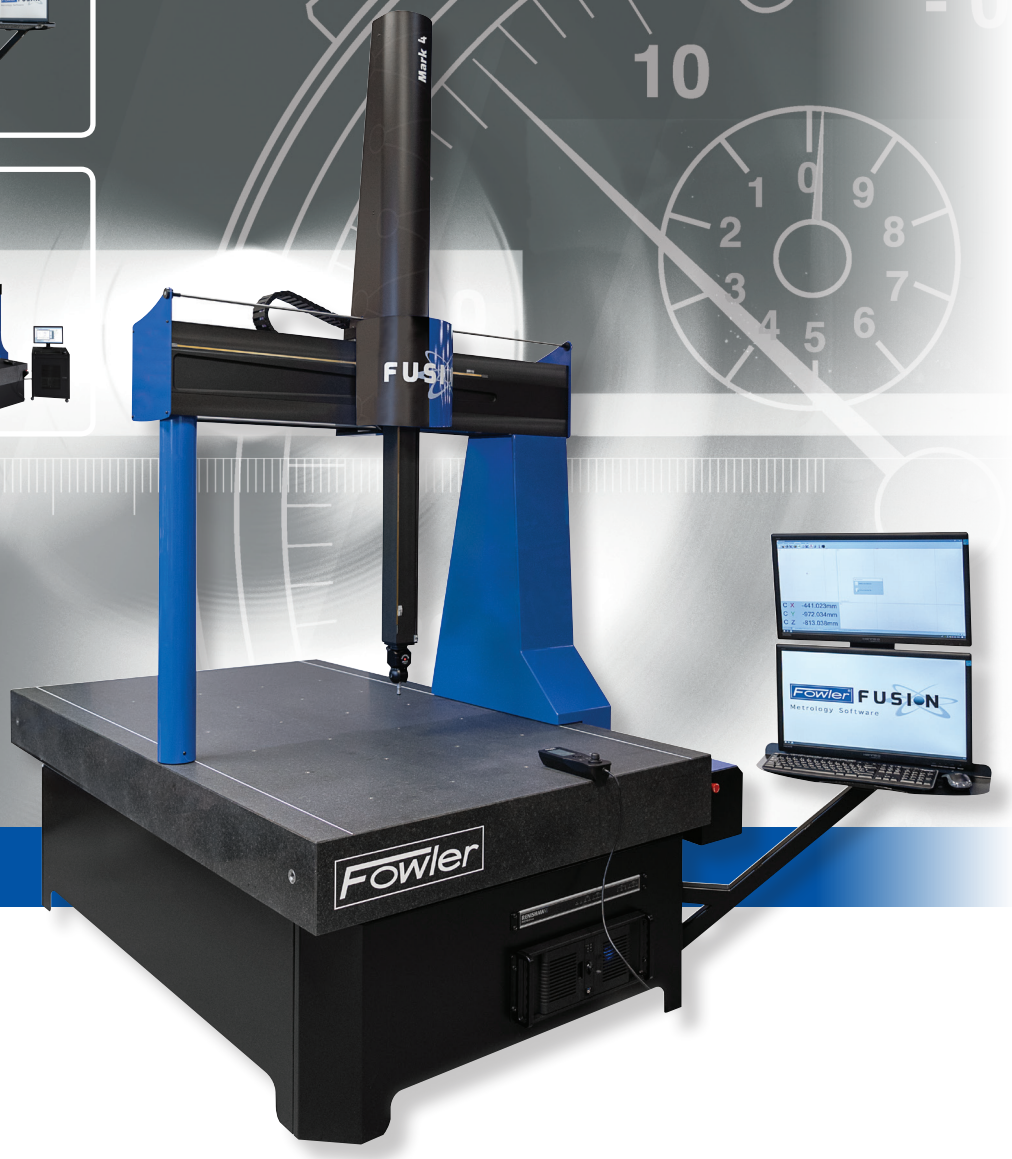

MARK 2 - Manual / CNC

THE COMPLETE INSPECTION SYSTEM

Fast, accurate and reliable, the MARK 2 CMM comes in four different sizes with Y axis travel up to 1500mm. Available as either a manual machine or with full CNC control, the MARK 2 can be used with touch trigger probe, or continuous contact scanning probe.

The all aluminum bridge structure not only ensures that the Mark 2 has low inertia and hence high acceleration to get the job done quickly, but also that the temperature of the machine rapidly follows the temperature of the room, ideal when the CMM is not housed in a controlled environment. Temperature compensation in the software reports results as if they had been measured at 20°C/68°F.

The standard high-tech granite and aluminum table, originally developed for the optics industry, provides fantastic natural damping of high frequency vibration and the granite Y rail allows pre-loading of the bridge air bearings in both directions for superior accuracy.

Another unique feature of the MARK 2 is that manual machines can be easily upgraded to CNC at any point in the future, which is great if you are not sure of your requirement or perhaps can't initially justify the additional cost of a CNC machine.

Because of Fowler FUSION'S fully integrated manufacturing processes, the MARK 2 offers unbelievable value, but above all it is easy to use.

MARK 2 - Manual

Key Features

- Shortest learning curve of any equivalent system
- Smallest overall footprint of any comparable size CMM
- Choice of Y axis sizes ranging from 600mm to 1500mm
- Suitable for the workshop environment
- Protection from environmental vibrations as standard
- Optimised friction free air bearings, aluminum bridge and granite table
- Free software upgrades - no maintenance fees or contracts

Machines Options

- Auto Temperature Compensation
- Touch Screen Joystick
- Industrial Joystick
- CCD Camera System
- Collimated Back Light Option
- Dual Monitor
- Fixture Kit

Common Probe Options:

MARK 2 Manual	MARK 2 CNC
• TP8	• RTP20
• MH20i	• PH10T (w/TP20, TP200)
	• PH10M (w/SP25)
	• PH6M (w/SP25)

Technical Specifications

Axis Travel (mm)	X 640 Y 600, 900, 1200, 1500 Z 500
Overall Size (mm)	X 1130 Y 900, 1200, 1500, 1800 Z 2320
*Volumetric Accuracy:	TP20 (2.4 + 0.4L/100) µm TP200 (2.3 + 0.4L/100) µm SP25M (2.1 + 0.4L/100) µm
Scale Resolution:	0.5µm
**Optimum Temp Range:	18 - 22°C
Operational Temp Range:	0 - 45°C
Table:	Honeycomb aluminium & granite or solid granite
Table Load Capacity:	300kg (Honeycomb) or 500kg (Solid)
Max. Velocity Vector:	600mm/sec - CNC Units Only
Max. Acceleration Vector:	600mm/sec^2 - CNC Units Only
Air Consumption:	50 l/min (1.8 cfm)
Required Air Pressure:	4 bar (60 psi)

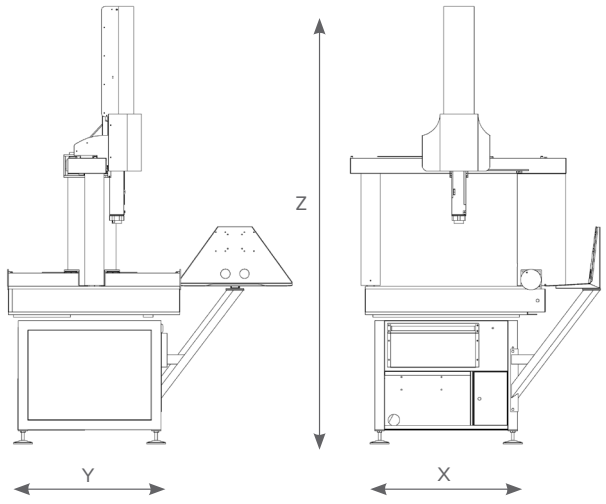

*Maximum Permissible Error MPE_E according to 10360-2, 2009 within the thermal limits defined for optimum temperature range.

**Installation environment thermal limits:
Rate of change <1°C/hr and <2°C/24hr | Temperature gradient <1°C/m

MARK 2 - Manual / CNC

Part Number	Description	Table
Manual		
MK2-6-M-HG-PCM	MARK 2 Manual CMM - (X) 640mm x (Y) 600mm x (Z) 500mm	Honeycomb Aluminum and Granite
MK2-9-M-HG-PCM	MARK 2 Manual CMM - (X) 640mm x (Y) 900mm x (Z) 500mm	Honeycomb Aluminum and Granite
MK2-6-M-SG-PCM	MARK 2 Manual CMM - (X) 640mm x (Y) 600mm x (Z) 500mm	Solid Granite
MK2-9-M-SG-PCM	MARK 2 Manual CMM - (X) 640mm x (Y) 900mm x (Z) 500mm	Solid Granite
MK2-12-M-SG-PCM	MARK 2 Manual CMM - (X) 640mm x (Y) 1200mm x (Z) 500mm	Solid Granite
CNC		
MK2-6-C-HG-PCM	MARK 2 CNC CMM - (X) 640mm x (Y) 600mm x (Z) 500mm	Honeycomb Aluminum and Granite
MK2-9-C-HG-PCM	MARK 2 CNC CMM - (X) 640mm x (Y) 900mm x (Z) 500mm	Honeycomb Aluminum and Granite
MK2-6-C-SG-PCM	MARK 2 CNC CMM - (X) 640mm x (Y) 600mm x (Z) 500mm	Solid Granite
MK2-9-C-SG-PCM	MARK 2 CNC CMM - (X) 640mm x (Y)900mm x (Z) 500mm	Solid Granite
MK2-12-C-SG-PCM	MARK 2 CNC CMM - (X) 640mm x (Y)1200mm x (Z) 500mm	Solid Granite
MK2-15-C-SG-PCM	MARK 2 CNC CMM - (X) 640mm x (Y) 1500mm x (Z) 500mm	Solid Granite

MARK 2HS - High Specification

ELIMINATE INSPECTION BOTTLENECKS

Since 2004 the MARK 2HS CMM has been providing manufacturing industry with a fast and accurate solution for their measurement problems. But, as ever, Fowler Fusion are continually striving to improve the solutions which they offer. The Mark 2HS is both faster and more accurate than the standard model, and all without compromising the fantastic value for money for which FUSION has become known.

The MARK 2HS also utilizes 0.1*µ*m resolution scales on each axis. Incorporated with state-of-the-art error mapping techniques this means that the HS model is the most accurate FUSION CMM – ideal when measuring tight tolerances.

0.1µm resolution scales fitted as standard

Key Features

- Fitted with 0.0001mm linear encoders for superior accuracy
- Angled bearing zero backlash drive system for quicker acceleration and faster travel
- Shortest learning curve of any equivalent system
- Choice of Y axis sizes ranging from 600mm to 1500mm
- Suitable for the workshop environment
- Protection from environmental vibrations as standard
- Optimised friction free air bearings, aluminum bridge and granite table
- Free software upgrades - no maintenance fees or contracts

Machines Options

- Auto Temperature Compensation
- Touch Screen Joystick
- Industrial Joystick
- CCD Camera System
- Collimated Back Light Option
- Dual Monitor
- Fixture Kit

Common Probe Options

- RTP20
- PH10T (w/TP20, TP200)
- PH10M (w/SP25)
- PH6M (w/SP25)

MARK 2HS High Specification - **CMM**

Rather than using the belt drive system, the MARK 2HS incorporates drive rod technology developed on our larger machines and vision products. This allows even greater accelerations to be achieved meaning that the HS model measures approximately 20% quicker than the standard variant – ideal for high volume measurement.

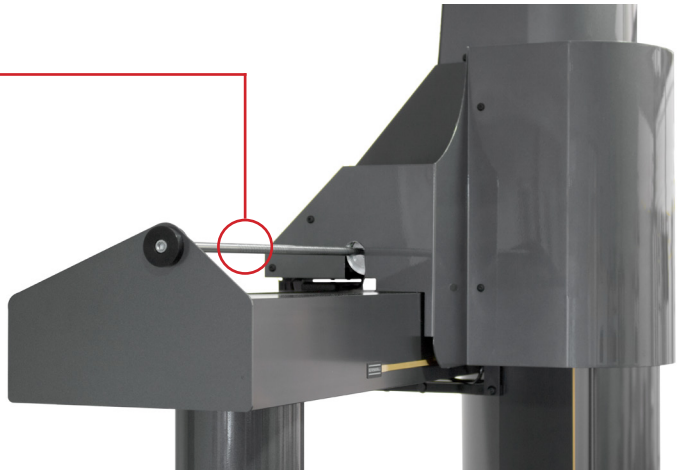

Technical Specifications

Axis Travel (mm)	X 640 Y 600, 900, 1200, 1500 Z 500
Overall Size (mm)	X 1130 Y 900, 1200, 1500, 1800 Z 2320
*Volumetric Accuracy:	TP20 (2.1 + 0.4L/100) µm TP200 (2.0 + 0.4L/100) µm SP25M (1.8 + 0.4L/100) µm
Scale Resolution:	0.1µm
**Optimum Temp Range:	18 - 22°C
Operational Temp Range:	0 - 45°C
Table:	Honeycomb aluminium & granite or solid granite
Table Load Capacity:	300kg (Honeycomb) or 500kg (Solid)
Max. Velocity Vector:	866mm/sec
Max. Acceleration Vector:	1200mm/sec^2
Air Consumption:	50 l/min (1.8 cfm)
Required Air Pressure:	4 bar (60 psi)

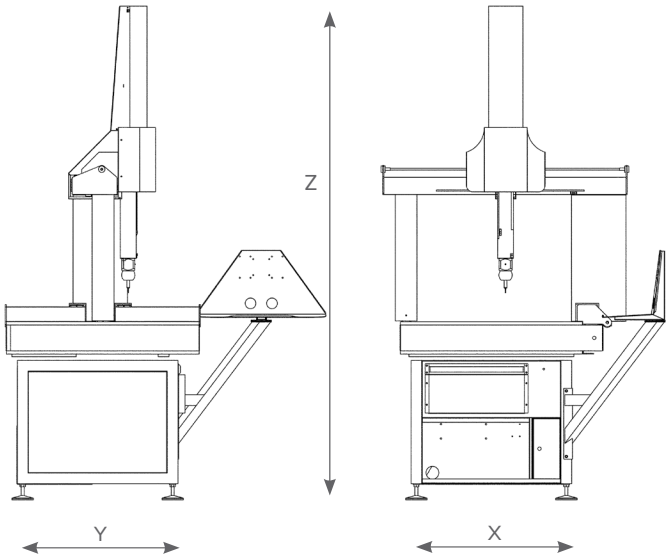

*Maximum Permissible Error MPE_E according to 10360-2, 2009 within the thermal limits defined for optimum temperature range.

**Installation environment thermal limits:
Rate of change <1°C/hr and <2°C/24hr | Temperature gradient <1°C/m

MARK 2 HS - High Specification

Part Number	Description	Table
MK2-6-HS-HG-PCM	MARK 2HS CMM - (X) 640mm x (Y) 600mm x (Z) 500mm	Honeycomb Aluminum and Granite
MK2-9-HS-HG-PCM	MARK 2HS CMM - (X) 640mm x (Y) 900mm x (Z) 500mm	Honeycomb Aluminum and Granite
MK2-6-HS-SG-PCM	MARK 2HS CMM - (X) 640mm x (Y) 600mm x (Z) 500mm	Solid Granite
MK2-9-HS-SG-PCM	MARK 2HS CMM - (X) 640mm x (Y) 900mm x (Z) 500mm	Solid Granite
MK2-12-HS-SG-PCM	MARK 2HS CMM - (X) 640mm x (Y) 1200mm x (Z) 500mm	Solid Granite
MK2-15-HS-SG-PCM	MARK 2HS CMM - (X) 640mm x (Y) 1500mm x (Z) 500mm	Solid Granite

MARK 4

LARGE AFFORDABLE PRECISION

The MARK 4 CMM is the result of a design evolution of the award winning range of machines. Many of the design improvements revolve around the right leg of the machine, which has been modeled on the hugely successful MARK 5 machine.

Greater air bearing separation results in greater stiffness, and so has improved the accuracy significantly. The first term error for this new model is more than a micron better.

All moving parts are light and this, combined with good design, means that the MARK 4 has low inertia and therefore optimal acceleration characteristics. The improved MARK 4 is fast, minimizing inspection times.

The MARK 4 range is the best value-for-money for the measuring volume of any CMM available in the market - the perfect affordable metrology solution for big and heavy parts.

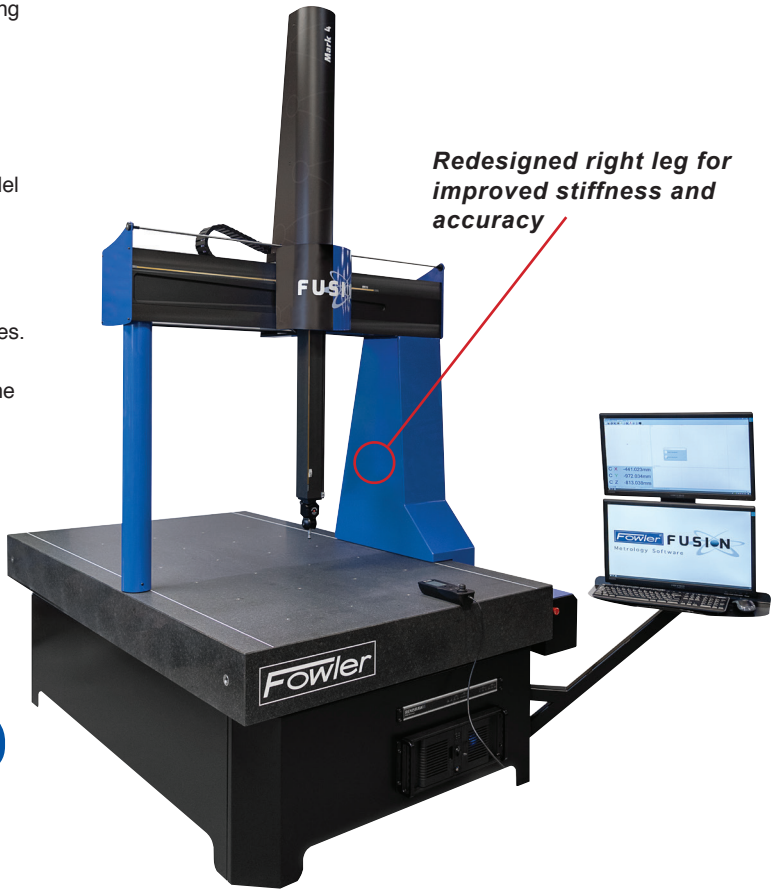

Key Features

- Shortest learning curve of any equivalent system
- Smallest overall footprint of any comparable size CMM
- Choice of Y axis sizes ranging from 1000mm to 3000mm
- Suitable for the workshop environment
- Optimized friction free air bearings, aluminum bridge and granite table
- Supplied with the CMM touch screen joystick as standard
- Free software upgrades - no maintenance fees or contracts

Machines Options

- 4400 kg load capacity
- Auto Temperature Compensation
- CCD Camera System
- Collimated Back Light Option
- Dual Monitor
- Fixture Kit

Common Probe Options

- RTP20
- PH10T (w/TP20, TP200)
- PH10M (w/SP25)
- PH6M (w/SP25)

Technical Specifications

Axis Travel (mm)	X 1000 Y 1000, 1500, 2000, 2500, 3000 Z 600, 800
Overall Size (mm)	X 1520 Y 1700, 2200, 2700, 3200, 3700 Z 2500, 2900
*Volumetric Accuracy:	TP20 (2.7 + 0.4L/100) µm TP200 (2.6 + 0.4L/100) µm SP25M (2.4 + 0.4L/100) µm
Scale Resolution:	0.5µm
**Optimum Temp Range:	18 - 22°C
Operational Temp Range:	0 - 45°C
Table:	Granite
Table Load Capacity:	1500kg as standard. Options up to 4400kg
Max. Velocity Vector:	600mm/sec
Max. Acceleration Vector:	600mm/sec^2
Air Consumption:	50 l/min (1.8 cfm)
Required Air Pressure:	4 bar (60 psi)

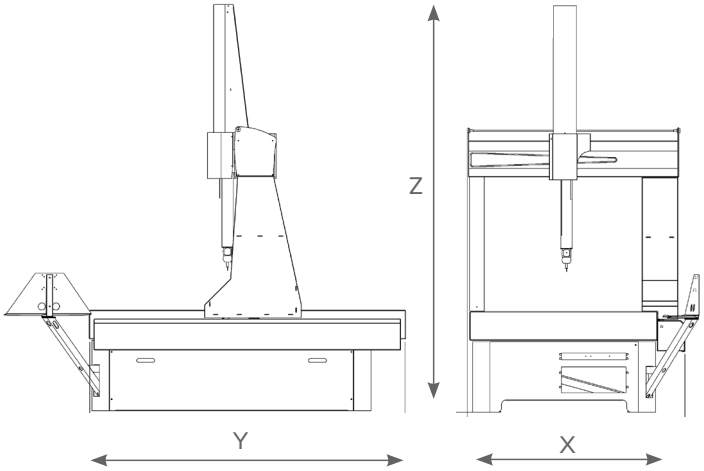

*Maximum Permissible Error MPE_E according to 10360-2, 2009 within the thermal limits defined for optimum temperature range.

**Installation environment thermal limits:
Rate of change <1°C/hr and <2°C/24hr | Temperature gradient <1°C/m

MARK 4

Part Number	Description
MK4-ZN3-106-SG-PCM	MARK 4 CMM - (X) 1000mm x (Y) 1000mm x (Z) 600mm
MK4-ZN3-108-SG-PCM	MARK 4 CMM - (X) 1000mm x (Y) 1000mm x (Z) 800mm
MK4-ZN3-156-SG-PCM	MARK 4 CMM - (X) 1000mm x (Y) 1500mm x (Z) 600mm
MK4-ZN3-158-SG-PCM	MARK 4 CMM - (X) 1000mm x (Y) 1500mm x (Z) 800mm
MK4-ZN3-206-SG-PCM	MARK 4 CMM - (X) 1000mm x (Y) 2000mm x (Z) 600mm
MK4-ZN3-208-SG-PCM	MARK 4 CMM - (X) 1000mm x (Y) 2000mm x (Z) 800mm
MK4-ZN3-256-SG-PCM	MARK 4 CMM - (X) 1000mm x (Y) 2500mm x (Z) 600mm
MK4-ZN3-258-SG-PCM	MARK 4 CMM - (X) 1000mm x (Y) 2500mm x (Z) 800mm
MK4-ZN3-306-SG-PCM	MARK 4 CMM - (X) 1000mm x (Y) 3000mm x (Z) 600mm
MK4-ZN3-308-SG-PCM	MARK 4 CMM - (X) 1000mm x (Y) 3000mm x (Z) 800mm

MARK 5

FROM STRENGTH TO STRENGTH

As CMMs get larger, it is not simply a case of scaling up the design of smaller models. Stiffness of the structure is critical, but weight must also be kept to a minimum. The MARK 5 CMM is not only Fowler's largest in their range of CMM products, but it is the culmination of experience and excellence in the design and manufacture of innovative metrology equipment incorporating the very latest materials technology.

The revolutionary bridge of the MARK 5 incorporates aluminum honeycomb sheets developed for use in formula one and the aerospace industry. The remarkable stiffness to weight ratio that this provides gives the MARK 5 an edge in both performance and speed. For a machine of this size, the MARK 5 is not only fast, but extremely accurate.

The drive systems designed for the MARK 5 offer simplicity and reliability and the novel system used on the Y axis ensures that there is no degradation of performance across the full range of machine sizes offered up to 3m.

A big machine should also be able to measure a heavy component and this is another area where Fowler has applied innovative thinking. Rather than simply increasing the depth of the granite table, which adds huge cost and weight to the machine, we offer a specially designed load plate to sit on the granite base. This plate can accept up to a six tonne load which will then be transmitted directly through the feet of the machine bench directly to the floor, meaning no loss of metrology performance.

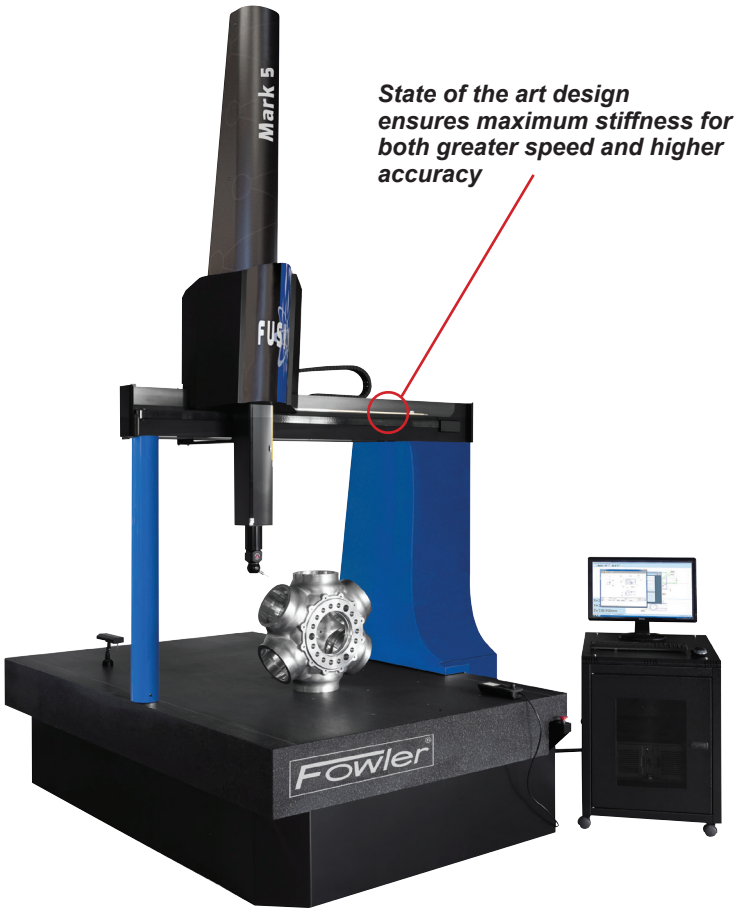

State of the art design ensures maximum stiffness for both greater speed and higher accuracy

Key Features

- Capable of measuring parts up to 6000 kg in weight
- Fitted with 0.0001mm linear encoders for superior accuracy
- Unique self-contained drive system ensures excellent performance over the entire measuring volume
- Choice of Y axis sizes ranging from 1000mm to 3000mm
- Supplied with the CMM touch screen joystick as standard
- Free software upgrades - no maintenance fees or contracts

Machines Options

- Load plate for loads up to 6 tonnes
- Auto Temperature Compensation
- CCD Camera System
- Collimated Back Light Option
- Dual Monitor
- Fixture Kit

Common Probe Options

- PH10T (w/TP20, TP200)
- PH10M (w/SP25)
- PH6M (w/SP25)

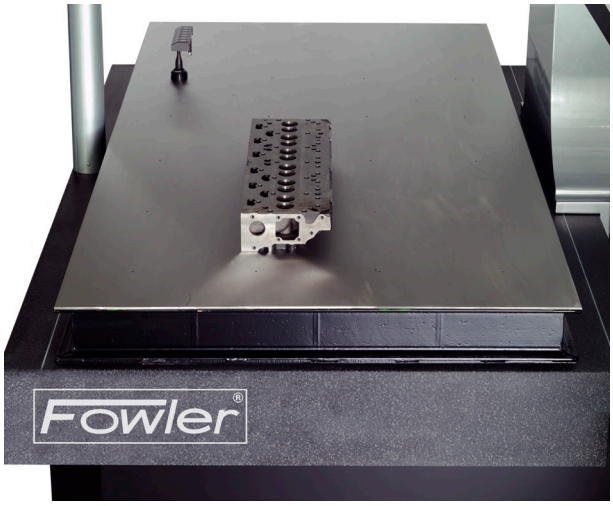

Technical Specifications

Axis Travel (mm)	X 1200 Y 1000, 1500, 2000, 2500, 3000 Z 1000
Overall Size (mm)	X 1940 Y 2000, 2500, 3000, 3500, 4000 Z 3595
*Volumetric Accuracy:	TP20 (2.9 + 0.4L/100) µm TP200 (2.8 + 0.4L/100) µm SP25M (2.6 + 0.4L/100) µm
Scale Resolution:	0.1µm
**Optimum Temp Range:	18 - 22°C
Operational Temp Range:	0 - 45°C
Table:	Granite
Table Load Capacity:	1500kg as standard. Options up to 6000kg
Max. Velocity Vector:	650mm/sec
Max. Acceleration Vector:	850mm/sec^2
Air Consumption:	50 l/min (1.8 cfm)
Required Air Pressure:	4 bar (60 psi)

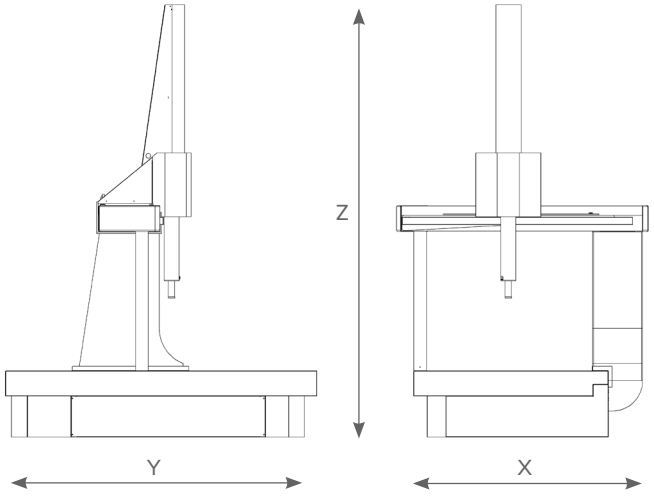

*Maximum Permissible Error MPE_E according to 10360-2, 2009 within the thermal limits defined for optimum temperature range.

**Installation environment thermal limits:
Rate of change <1°C/hr and <2°C/24hr | Temperature gradient <1°C/m

MARK 5

Part Number	Description
MK5-10-SG-PCM	MARK 5 CMM - (X) 1200mm x (Y) 1000mm x (Z) 1000mm
MK5-15-SG-PCM	MARK 5 CMM - (X) 1200mm x (Y) 1500mm x (Z) 1000mm
MK5-20-SG-PCM	MARK 5 CMM - (X) 1200mm x (Y) 2000mm x (Z) 1000mm
MK5-25-SG-PCM	MARK 5 CMM - (X) 1200mm x (Y) 2500mm x (Z) 1000mm
MK5-30-SG-PCM	MARK 5 CMM - (X) 1200mm x (Y) 3000mm x (Z) 1000mm

CMM - Probe Options

Every bridge-type FUSION CMM fully supports the range of probe heads and both touch trigger and scanning probes supplied by Renishaw. The following are common options:

TP8 Probe - supplied as standard

The TP8 probe offers an entry level option for customers that require infrequent indexing of the probe and no indexing during the running of a measurement programme. The TP8 is supplied with two knuckle joints to allow infinite alignment of the probe to the feature being measured, but this alignment is non-repeatable, meaning that the stylus will need to be requalified following each index. The TP8 probe accepts the M3 range of styli.

MH20i Probe Head

The MH20i probe offers repeatable manual indexing of the probe head from 0° to 90° in the A axis and through 360° in the B axis, in 15° increments. Ideal for manual CMMs, it can also be used on CNC models, but will require intervention from the operator whenever indexing is required. The MH20i uses a TP20 stylus module, which in turn accepts the M2 range of styli.

Part Number: MH20i

RTP20 Probe Head

The RTP20 probe offers a really cost effective solution for customers that require automatic indexing on CNC machines. Modelled on the MH20i body, the RTP20 uses the CNC motion of the CMM to position itself using a post mounted to the bed of the machine. Like the MH20i it is able to index from 0° to 90° in the A axis and through 360° in the B axis, in 15° increments and uses a TP20 stylus module, which in turn accepts the M2 range of styli. The RTP20 is also fully compatible with the MCR20 change rack to provide an option that provides both automatic stylus changing as well as automatic indexing.

Part Number: RTP20

PH10T Probe Head

The PH10T is a fully motorized probe head that offers immediate indexing from 0° to 105° in the A axis and through 360° in the B axis, in 7.5° increments. This probe head should be used by customers requiring frequent indexing or when more precise alignment to the features being measured is required.

Common probe options for the PH10T:

TP20

The TP20 is a robust probe for general purpose measurement that can be used in conjunction with the MCR20 change rack to facilitate automatic stylus changing. The TP20 stylus modules can be supplied with different trigger forces which accept M2 styli up to 60mm long, and with different length modules to assist with probing at greater depths.

Part Number: PH10T-TP20

TP200

The TP200 probe utilizes strain gage technology and so does not exhibit lobing characteristics and therefore should be considered by customers requiring more accurate measurement of form. It can be used with the SCR200 change rack for automatic stylus changing and the TP200 modules are available as standard or low force for use with M2 styli up to 100mm long.

Part Number: PH10T-TP200

PH10T probe head fitted with TP20 probe

PH10M Probe Head

PH10M with SP25M scanning probe

Like the PH10T probe head, the PH10M is also a fully motorised probe head that offer immediate indexing from 0° to 105° in the A axis and through 360° in the B axis, in 7.5° increments. The M head, however, incorporates an autojoint with multiwire capability, which is necessary for the SP25M scanning probe. The PH10M probe head can also be fitted with either TP20 or TP200 probes and should be chosen in preference to the PH10T when using these probes if the future use of a scanning technology may be required.

Part Numbers: PH10M-TP20
PH10M-TP200

PH6M with SP25M scanning probe

PH6M Probe Head

This head provides a fixed autojoint for when an SP25M scanning probe is needed without the requirement for indexing.

Part Numbers: PH6M-SP25-FCR
PH6M-SP25-MRS

SP25M Scanning Probe

The SP25M scanning probe uses an isolated optical metrology transducer system to enable extremely accurate measurements to be taken with the stylus in continuous contact with the feature being inspected. This enables more data to be taken which is important when form is critical. A range of modules are available for the SP25M to provide optimised scanning performance using M3 styli up to 400mm long.

Part Numbers: PH10M-SP25-FCR
PH10M-SP25-MRS

Probe Comparison

	Integral Probe	Index Motion	Maximum Length	Index Resolution	Index Positions	Repeatable Indexing	Repeatable Stylus Charging
TP8	Yes	Manual	105mm	Infinite	Infinite	No	No
MH20i	Yes	Manual	150mm	15°	168	Yes	Yes
RTP20	Yes	Automated	168mm	15°	168	Yes	Yes
PH10T	No	Motorised	450mm	7.5°	720	Yes	Yes
PH6M	No	No	450mm	No	No	No	Yes
PH10M	No	Motorised	450mm	7.5°	720	Yes	Yes

ACCESSORIES

FURTHER CMM ENHANCEMENTS

CMM Touch Screen Joystick

The touch screen joystick gives you control of the FUSION 3D inspection software and the 3-axis machine motion from an easy to operate handheld device.

The CMM touch screen joystick allows users complete control of the FUSION 3D inspection software, clearly displayed through the unique joystick graphical user interface and high resolution touch sensitive screen - there is no need to interface with the PC. This is especially useful on larger CMMs when you need to stand over the part or around the back of the machine, to position the probe or clearly see probe measurements.

The colour touch screen joystick is invaluable when creating and running inspection programs, enabling complete control of the X, Y and Z-axis machine movement, probe head indexing and machine status.- You have complete control at your fingertips.

The touch screen joystick is supplied as standard with both the MARK 4 and MARK 5 CMMs.

Part Number: DEVA031

Industrial CMM Joystick

The industrial CMM joystick is a robust lower-cost version of the acclaimed CMM touch-screen joystick. It has full X-Y-Z axis motion control, X-Y-Z +/- direction measurement capability, feed rate override and the ability to insert Move Via points as required. The industrial joystick has been ergonomically designed for left or right handed operation, and includes a magnetic mount to enable quick placement on the CMM.

Part Number: DEVA044

Fixture Kit

Patent pending T-slot and T-nut technology provides infinite adjustment of the fixture components in multiple directions. Clamps, locators and supports can be placed in exactly the right position to suit the part. Greater flexibility results in less complicated designs, fixtures are easier to assemble and completed in less time.

Fixture mountings incorporate one or more t-slot. The slot receives a sliding t-nut which is used to secure the fixture components in place. For rapid repeat set-ups, fixture components can be removed and replaced without disturbing the t-nut while laser engraved scales and alpha markings facilitate more precise builds.

Any number of designs can be created from a single fixture kit. Over one hundred high quality parts manufactured from anodized aluminum and stainless steel are supplied in a compartmented storage case. All types of prismatic and free form parts can be held and supported correctly during measurement.

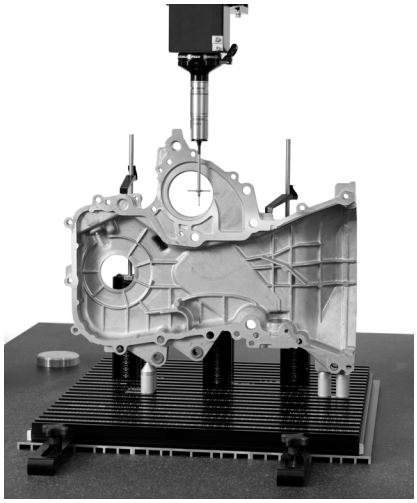

FIXTURE KITS

Part Number	Description
FP-S	300mm x 450mm Fixture Base
FP-M	450mm x 450mm Fixture Base
FP-L	600mm x 450mm Fixture Base

Automation Interface Unit

The FUSION automation interface adds the capability for FUSION 3D programs to be remotely controlled and monitored using an external system allowing any FUSION CMM to be integrated with an automated component handling system, whether this be a fully controlled, PLC driven manufacturing system, a robotic loader or just an automatic bar feeder. The package comprises of an optically isolated digital I/O system and a software module that enables the software to be setup to follow a defined operating sequence to allow the automated operation.

The automation interface includes documentation and a software utility package, but because of the need to have detailed knowledge for the automated handling system for each installation, integration must be handled by the system integrator and cannot be supported by Fowler FUSION.

Part Number: AUTOM-IF

Collimated Back Light

The CMM collimated light enables backlight illumination of 3D or turned components when used with the CMM Camera System. When using collimated light to backlight components, a clear and crisp silhouette, similar to using a profile projector, is produced. A single-LED collimated light features a compact, lightweight design which is perfect for the MARK 2 range of CMMs and is fully programmable and controllable within FUSION vision software.

Part Number: COL-BL-120

Automatic Temperature Compensation

The FUSION Temperature Compensation option enables your CMM to maintain accuracy in an uncontrolled environment, such as on the shop floor.

In an ideal world, your CMM would be installed in a perfectly temperature controlled room. However, in the real world of manufacturing, sometimes that isn't possible or practical because you need your CMM next to where your parts are being made.

A USB temperature sensor embedded in the bridge of the CMM provides feedback to compensate as though measurements have been taken at 20°C

Part Number: AUTO-TEMP

Dual Monitor

The vertically mounted dual-monitor arm enables FUSION CAD or Vision software modules to be viewed on a separate tiltable screen to the FUSION 3D inspection software.

Part Number: DUAL-MON

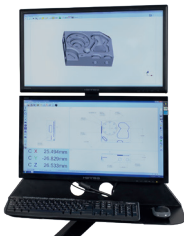

Air Dryer

To ensure a good quality air supply and maximise the performance and life of the CMM, an air dryer is highly recommended.

Contact Fowler Sales Department for more information 1-800-788-2353

FUSION Software

Part Number	Description
54-950-106-0	FUSION 3D CAD Comparison Module
54-950-106-1	FUSION 3D CAD Comparison Module - **Off-line**
54-950-107-0	FUSION Programming from CAD Module
54-950-107-1	FUSION 3D Programming from CAD Module - **Off-line**
54-950-108-0	FUSION 3D Geometric Measurement Software

MARK CMM - Loc-N-Load™ Fixture Systems

Choose Loc-N-Load™ for traditional CMMs, Optical Comparators and Gage Arms

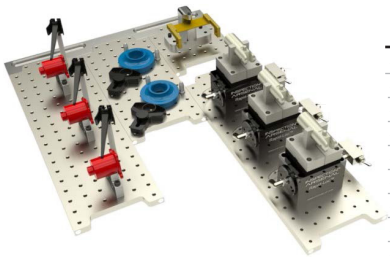

Loc-N-Load™ Fixture Systems

Inch 1/4-20 — Clear Anodized Aluminum, 1x1" hole pattern, 1/2" thick

Part Number	Description
SYS05_DK12TR03	CMM 12" Dock, Plates + 58 pc Starter Kit
SYS05_DK12TR02	CMM 12" Dock, Plates + 70 pc Complete Kit
SYS05_DK12TR01	CMM 12" Dock, Plates + 146 pc Works Kit
SYS10_DK18TR03	CMM 18" Dock, Plates + 58 pc Starter Kit
SYS10_DK18TR02	CMM 18" Dock, Plates + 70 pc Complete Kit
SYS10_DK18TR01	CMM 18" Dock, Plates + 146 pc Works Kit
SYS20_DK30TR03	CMM 30" Dock, Plates + 58 pc Starter Kit
SYS20_DK30TR02	CMM 30" Dock, Plates + 70 pc Complete Kit
SYS20_DK30TR01	CMM 30" Dock, Plates + 146 pc Works Kit
SYS60_OC6TR03	Optical Comparator 6" Dock/Plates+ 58 pc Starter
SYS60_DK24TR02	Gage Arm 24" Dock/Plates +70 pc Complete Kit

Metric M6 — Clear Anodized Aluminum, 20x20mm hole pattern, 12.7mm

Part Number	Description
SYSM1_DK360TR03	CMM 360mm Dock, Plates + 58 pc Starter Kit
SYSM1_DK360TR02	CMM 360mm Dock, Plates + 70 pc Complete Kit
SYSM1_DK360TR01	CMM 360mm Dock, Plates + 139 pc Works Kit
SYSM2_DK540TR03	CMM 540mm Dock, Plates + 58 pc Starter Kit
SYSM2_DK540TR02	CMM 540mm Dock, Plates + 70 pc Complete Kit
SYSM2_DK540TR01	CMM 540mm Dock, Plates + 139 pc Works Kit
SYSM3_DK720TR03	CMM 720mm Dock, Plates + 58 pc Starter Kit
SYSM3_DK720TR02	CMM 720mm Dock, Plates + 70 pc Complete Kit
SYSM3_DK720TR03	CMM 720mm Dock, Plates + 139 pc Works Kit
SYS60M_OC180TR03	Optical Comparator 180mm Dock/Plates+ 58 pc Kit
SYS60M_DK540TR02	Gage Arm 540mm Dock/Plates +70 pc Complete Kit

Loc-N-Load™ ALUMINUM - Individual Rails, Plates and Speciality Plates

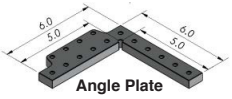

Angle Plate

Qual Ball Plate

Adapter Plate

Loc-N-Load™ ALUMINUM

Speciality Plates

Part Number	Description
Inch - 1/4-20	
LNL-ADPT-06	Adapter Plate
LNL-ANGL-0603	Angle Plate
LNL-QUAL-PLT	Qualifying Ball Plate
LNL-0606-4X	Indexable Plate
LNL-RND-0608	Radial Plate
Metric - M6	
LNL-ADPT-M6	Adaper Plate
LNL-ANGL-M6	Angle Plate
LNL-QUAL-PLT-M	Qualifying Ball Plate

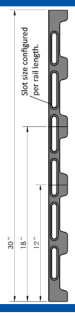

Radial/Indexable Plates

Part Number	Description
Inch - 1/4-20	
LNL-DOCK-12	12" Dock
LNL-DOCK-18	18" Dock
LNL-DOCK-30	30" Dock
LNL-PLT-0606	6x6" Plate
LNL-PLT-0612	6x12" Plate
LNL-PLT-0618	6x18" Plate
LNL-PLT-1212	12x12" Plate
LNL-PLT-1218	12x18" Plate
LNL-PLT-1818	18x18" Plate
LNL-PLT-1824	18x24" Plate

Part Number	Description
Metric - M6	
LNL-DOCK-M360	360 Dock
LNL-DOCK-M540	540 Dock
LNL-DOCK-M720	720 Dock
LNL-M180180	180x180 Plate
LNL-M180360	180x360 Plate
LNL-M360360	160x360 Plate
LNL-M360540	360x540 Plate

Vises and Speciality Work Holding

Rapid-Loc™ & Modular Tower

Part Number	Description
Inch - 1/4-20	
RL-VISE-SYS02	Rapid-Loc™ Vise System
MT2-SYS-01	Modular Tower System
Metric - M6	
RLM-ADAPT-02	Base Plate Adapter for METRIC Rapid-Loc™

Rapid-Loc™ & Riser-Grip™

Part Number	Description
Inch - 1/4-20	
SC-06-03	3 Leg 6" Spider Clamp
SC-06-01	1 Leg 3" Spider Clamp
SP-VISE-2.50	Spanner Vice, 2pc.
CC-ER11	ER Collet Chuck
CC-ER16	ER Collet Chuck, flanged
RG-2.75	Riser-Grip™, adjustable
Metric - M6	
SC-06-03-M	3 Leg 6" Spider Clamp
SC-06-01-M	1 Leg 3" Spider Clamp
RG-2.75	Riser-Grip™, adjustable

Work Holding Kits and Sets

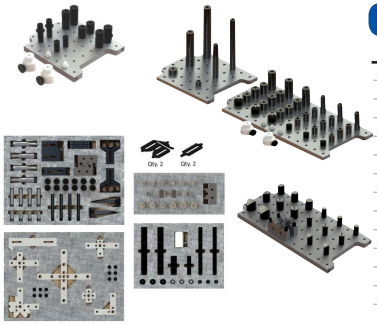

Work Holding Kits & Sets

Part Number	Description
Inch - 1/4-20	
TR-KIT-03	Starter Kit - 58pcs.
TR-KIT-02	Complete Kit - 70pcs.
TR-KIT-01	Works Kit - 146pcs.
MAGN-SET-30	Magnetic Riser Set - 23pcs.
STOF-SET-30	Stand-Off & Rest Pad - 37pcs.
STOFE-SET-30	Enhamced Stand-Off - 16pcs.
Metric - M6	
TR-KIT-03M	Starter Kit - 58pcs.
TR-KIT-02M	Complete Kit - 70pcs.
TR-KIT-01M	Works Kit - 146pcs.
MAGN-SET-30M	Magnetic Riser Set - 23pcs.
STOF-SET-30M	Stand-Off & Rest Pad - 37pcs.
STOFE-SET-30M	Enhamced Stand-Off - 16pcs.

Speciality Work Holding and Featured Products

Radial Plate
Perfect for holding round parts. Laser marked rings make aligning easy.
Part Number: LNL-RND-0608

Indexable Plate
Great for inspecting complex parts. Turn and lock plate to access hard to reach features.
Part Number: LNL-0606-4x

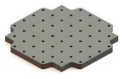

Spider-Clamp™ 3-Legged
Hold round parts from 1.18" to 6" in dia. Delicate parts held without distortion. great vision inspection.
Part Number: SC-06-03

Spider-Clamp™ 1-Legged
Use several of these 3" clamps to hold parts of infinite size and shape.
Part Number: SC-06-01

Spanner-Vise™
2-piece vise can infinitely adjust to accommodate workpiece - lock down securely.
Part Number: SP-VISE-2.5

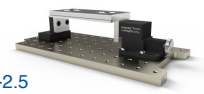

ER11 & ER16 Collet Chucks
Hold small dia. parts and create multi-part fixtures. Opening from 0.012"-0.312" and from 0.012"-0.416". ER16 is flanged for greater stability
Part Numbers: CC-ER11 CC-ER16

Sturdy Lever Clamp
2.5" length provides up to 30lbs. of force for larger parts.
Part Number: LC-2.50

Vision Corner Block
Allows complete view of the part on a vision stage.
Part Number: VCB-150M

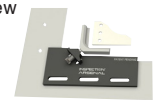

NOTES

Fowler®

HIGH PRECISION

HEADQUARTERS
66 Rowe Street • Newton • Massachusetts 02466
(800) 788-2353 • (617) 332-4137 fax
www.fowlerprecision.com • sales@fowlerprecision.com

DISTRIBUTION CENTER & SHOWROOM
28010 Industry Drive
Valencia, California 91355
(415) 633-5354