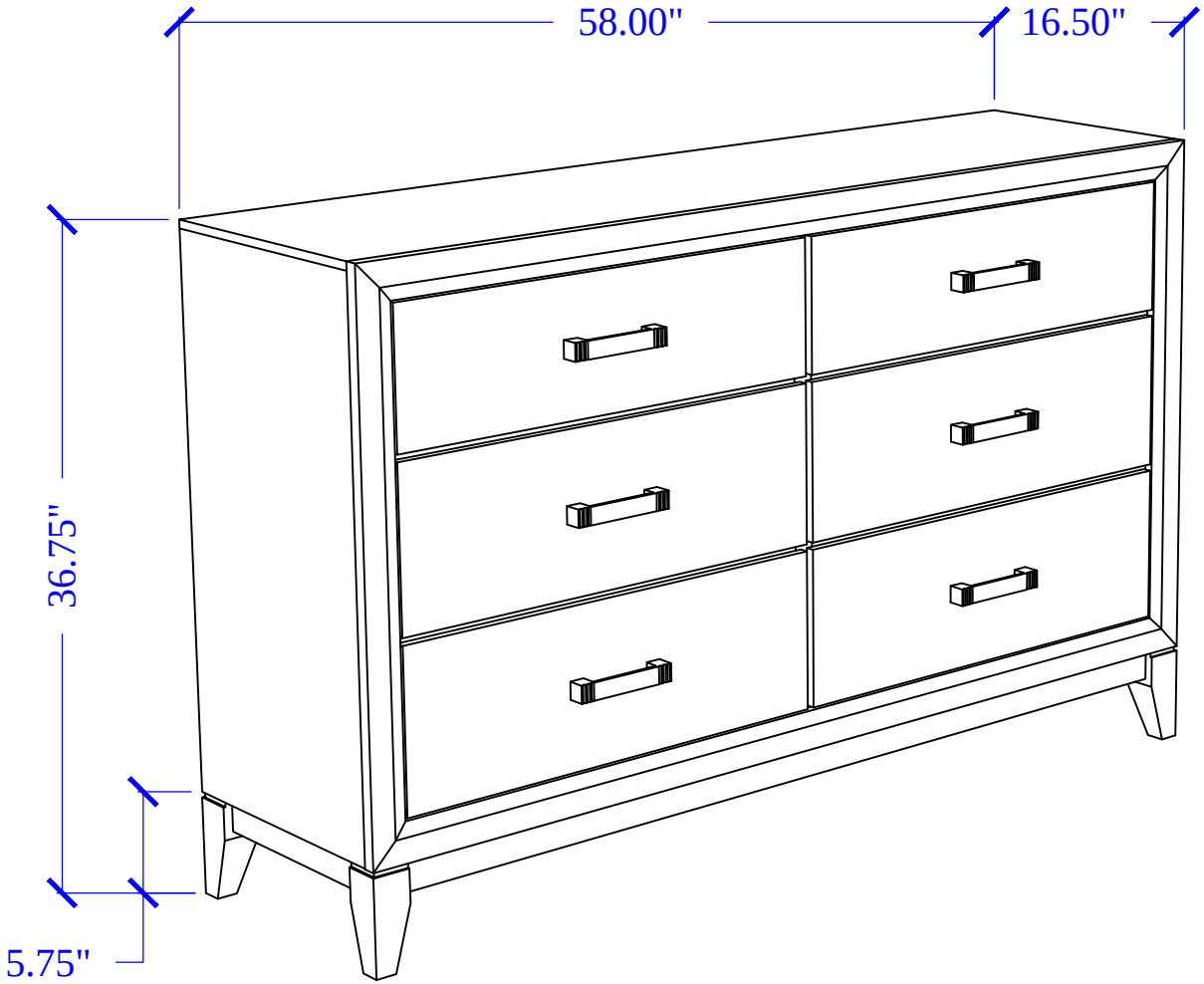
58.00"
16.50"
36.75"
5.75"

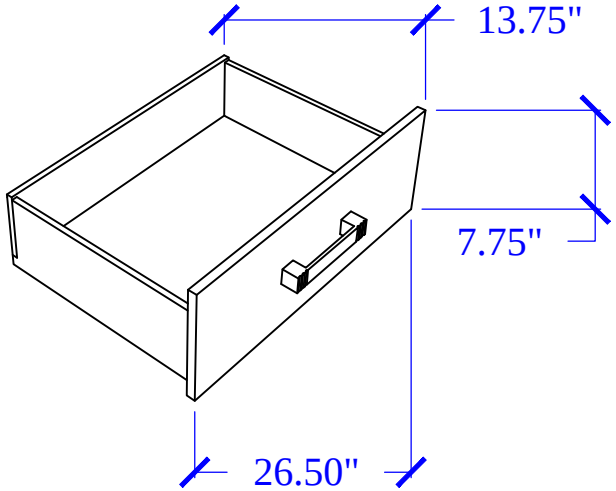
13.75"
7.75"
26.50"