User's Manual & Operating Instructions

PT-02-230-E / PT-02-240-E / PT-03-230-E / PT-033-230-E / PT-033-240-E / PT-05-400-E / PT-09-400-E

Electric Heater

PEEA-400

ENGLISH GB 1-7

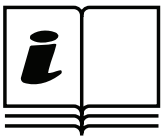

Read The Instruction manual: When this symbol is marked on a product, it means that the instruction manual must be read.

In order to avoid overheating, do not cover the heater.

GB

PLEASE READ THE FOLLOWING INSTRUCTIONS CAREFULLY BEFORE USING THE APPLIANCE.

- Children of less than 3 years should be kept away unless continuously supervised. Children aged from 3 years and less than 8 years shall only switch on/off the appliance provided that it has been placed or installed in its intended normal operating position and they have been given supervision or instruction concerning use of the appliance in a safe way and understand the hazards involved. Children aged from 3 years and less than 8 years shall not plug in, regulate and clean the appliance or perform user maintenance.
- CAUTION: Some parts of this product can become very hot and cause burns. Particular attention has to be given where children and vulnerable people are present.
- The heater must not be located immediately below a socket-outlet.
- Do not use the appliance for other than its intended use. For domestic indoor use only.
- Place the appliance on a flat, stable, heat-resistant surface. Operating the product in any other position could cause a hazard.
- There may be trace of odour during the first few minutes of initial use. This is normal and will quickly disappear.
- Do not attempt to repair, disassemble or modify the appliance. There are no user-serviceable parts inside.
- WARNING: This heater is not equipped with a device to control the room temperature. Do not use this heater in small rooms when they are occupied by persons not capable of leaving the room on their own, unless constant supervision is provided

© 2017, Obelis S.A Registered Address:
Bd.Général Wahis, 53, 1030 Brussels, Belgium

PROTEMP

PT-02-230-E / PT-02-240-E / PT-03-230-E / PT-033-240-E / PT-05-400-E / PT-09-400-E

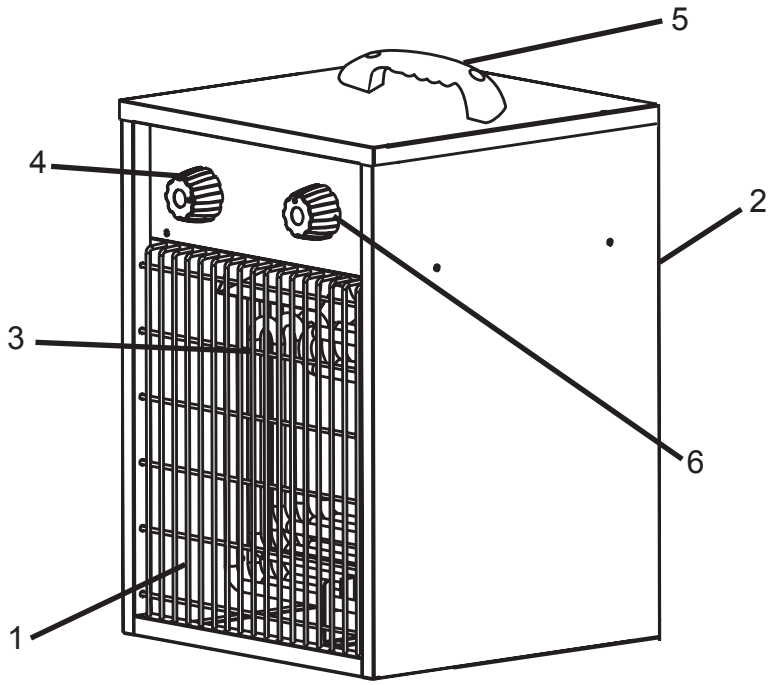

GB

1. Front Guard
2. Fan
3. Heater Coil
4. Function Selector
5. Handle
6. Thermostat

GB

SPECIFICATIONS

Specifications subject to change without notice

	PT-02-230-E PT-02-240-E	PT-03-230-E	PT-033-230-E	PT-05-400-E	PT-09-400-E
THERMAL POWER (kW)	2.0	3.0	3.3	5.0	9.0
THERMAL POWER (BTU)	6,820	10,250	11,250	17,060	30,710
AIR FLOW (m^3/H)	186	540	476	530	708
HEATING AREA (m^3)	20	30	33	50	90
POWER (Volt / Hz) (PT-230-E)	230~50	230~50	230~50	400~50	400~50
POWER (Volt / Hz) (PT-240-E)	220-240~50	220-240~50	220-240~50	—	—
HEAT SETTINGS	3	2	2	2	2
INGRESS PROTECTION RATING (IP)	X4	X4	X4	X4	X4
FUNCTIONS / SETTINGS					
Unit is Off	○	○	○	○	○
Fan Runs - No Heating		✤	✤	✤	✤
Fan Runs - Quarter Power Heating	✤ ▭				
Fan Runs - Half Power Heating	✤ ▬	✤ ▬	✤ ▬	✤ ▬	✤ ▬
Fan Runs - Full Power Heating	✤ ■	✤ ■	✤ ■	✤ ■	✤ ■
NOTE: PT-03-230-E / PT-03-240-E / PT-033-230-E / PT-033-240-E / PT-05-400-E / PT-09-400-E, the fan will run continuously while the heater is operating.					
NOTE: PT-02-230-E / PT-02-240-E, the fan will shut off when desired temperature is reached. Fan will not run continuously.					

© 2017, Obelis S.A Registered Address:
Bd.Général Wahis, 53, 1030 Brussels, Belgium

Safety Information

IMPORTANT: Read and understand all of the safety information and instructions in this manual before operating your heater.

⚠DANGER	**RISK OF EXPLOSION! Do Not operate this heater where there are harmful, explosive or flammable gasses, fumes or hazardous substances.**
⚠WARNING	**RISK OF FIRE! Do Not operate this heater near combustible materials.**
⚠WARNING	**ELECTRIC SHOCK HAZARD! Do not use this heater in the immediate surroundings of a bath, a shower, or a swimming pool.**
⚠WARNING	**BURN HAZARD! Do Not touch the front of heater while it is operating. This heater is hot while operating.**
⚠WARNING	**RISK OF INJURY! DO NOT MOVE HEATER WHILE IT IS OPERATING.**
⚠CAUTION	**In order to avoid a hazard due to inadvertent resetting of the thermal cut-out, this appliance must not be supplied through an external switching device, such as a timer, or connected to a circuit that is regularly switched on and off by the utility.**

This appliance can be used by children aged from 8 years and above and persons with reduced physical, sensory or mental capabilities or lack of experience or and knowledge if they have been given supervision or instruction concerning use of the appliance in a safe way and understand the hazards involved. Children shall not play with the appliance. Cleaning and user maintenance shall not be made by children without supervision.

Children should be supervised so they do not play with the appliance.

ALWAYS use only the electrical power (voltage and frequency) specified on the model plate of the heater.

ALWAYS use an extension cord properly rated for this appliance.

ALWAYS ensure that all cords are protected against short circuit and overload.

ALWAYS keep power cord away from hot air outlet.

ALWAYS disconnect heater from power source when not in use.

NEVER place the heater on a small, uneven or unstable surface that may cause the heater to fall.

NEVER connect other appliances to the same electrical outlet as the fan heater.

NEVER operate heater with heater guards removed.

NEVER block hot air outlet while heater is operating.

NEVER cover or obstruct heater.

NEVER use ducting with heater.

NEVER pull or carry heater by the power cord.

NEVER use heater with an external switching device: such as a timer.

If heater is damaged, do not use it. The heater must be serviced by a qualified person or service agent.

If the supply cord is damaged, it must be replaced by the manufacturer, its service agent or similarly qualified persons in order to avoid a hazard.

Do not use this heater in the immediate surroundings of a bath, a shower or a swimming pool.

The heater must not be located immediately below a socket outlet.

© 2017, Obelis S.A Registered Address:
Bd.Général Wahis, 53, 1030 Brussels, Belgium

Operation

Assembly

1. Align holes in the upper housing with the 2 holes in the handle.
2. Insert screws and tighten firmly.

Operation

1. Position the fan heater so that it stands upright on a firm, level surface and at a safe distance from wet environments and flammable objects.
2. Connect the fan heater to the proper electrical power.
3. Set the thermostat dial to the maximum temperature.
4. The fan heater will switch on when the function selector dial is set to one of the three power settings.

Setting	Function
○	Unit is Off
✤	Fan Runs - No heating
✤ ▭	Fan Runs - Quarter Power Heating
✤ ▬	Fan Runs - Half Power Heating
✤ ■	Fan Runs - Full Power Heating
NOTE: PT-03-230-EU / PT-033-230-EU / PT-05-400-EU / PT-09-400-EU, the fan will run continuously while the heater is operating. **NOTE:** PT-02-230-EU the fan will shut off when desired temperature is reached. Fan will not run continuously. **NOTE:** This chart does not apply to all models. Check your heater for appropriate symbols.	

5. Once the room reaches the desired temperature, turn the thermostat dial back until heating element turns off.

Automatic Overheat Safety Control

– This heater is equipped with safety internal heat limiting thermostat and overheat protection circuit. When a potential overheat temperature is reached, the system will automatically shut the heater off.

Thermostat Instructions

– At first, set the thermostat to “+” and let the heater operate with full power input. When the room temperature reaches the required value, turn the thermostat to the left until it switches off.

– The thermostat will then switch on and off automatically to control the room temperature according to the preset value and keep the room temperature constant.

– When using the heater for the first time, you may notice a slight emission of smoke. This is quite normal and it stops after a short time. The heating element is made of steel and was coated with a layer of protective oil during production. The smoke is caused by the leftover oil as it is heated.

Cleaning and Maintenance

– Before cleaning the appliance, disconnect it from the outlet and let it cool down.

– The enclosure is easy to get dirty. Wipe it often with a soft sponge. For very dirty parts, wipe with a sponge dipped in < 50°C water and mild detergent, then dry the heater enclosure with a clean cloth. Be careful not to let the water enter the inside of the appliance

– In order to protect the enclosure, don’t splash water onto the heater, and never use a solvent like gasoline, isoamyl acetate, toluene, etc. to clean the heater.

– When you store the heater, let it cool down first and, keep it dry. Then cover it with a plastic bag, put it in the packing box and store it in a dry, ventilated place.

© 2017, Obelis S.A Registered Address:
Bd.Général Wahis, 53, 1030 Brussels, Belgium

Plug Replacement

⚠WARNING RISK OF ELECTRIC SHOCK! DISCONNECT FROM POWER BEFORE MAINTENANCE.

NOTE: This section only applies to heaters sold or used in Great Britain.

This appliance is supplied with a BS1363 3 pin plug fitted with a fuse. Should the fuse require replacement, it must be replaced with a fuse with the proper amp rating. (see Technical Specifications page 2) and approved to BS1362.

In the event the mains plug has to be removed/ replaced for any reason, please note:

IMPORTANT: The wires in the mains lead are colored in accordance with the following code:

Blue – Neutral Brown – Live
Green/Yellow – Earth

As the colors of the wires in the mains lead of this appliance may not correspond with the colored markings identifying the terminals in your plug, proceed as follows: The blue wire must be connected to the terminal marked with an N or colored black. The brown wire must be connected to the terminal marked with an L or colored red. The green/ yellow wire must be connected to the earthing terminal which is marked with an E or with the earth symbol.

NOTE: If a moulded plug is fitted and has to be removed take great care in disposing of the plug and severed cable, it must be destroyed to prevent engaging into a socket.

⚠WARNING Never connect live or neutral wires to the earth terminal of the plug.

Plug Replacement Wiring Diagram

Figure 3

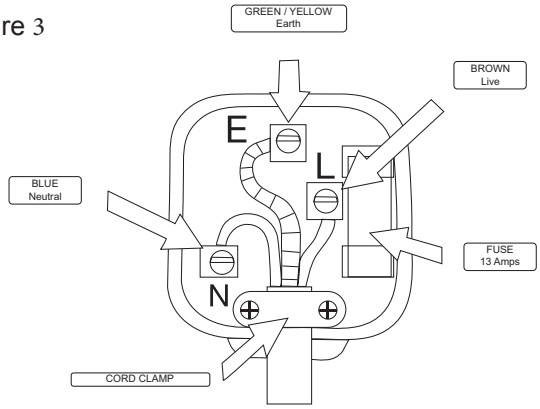

Troubleshooting

Problem	Cause	Solution
Fan stays on when heat shuts off.	1. Fan runs continuously while the heater is operating.	1. Heater is operating correctly.
Fan speed stays the same when changing settings.	1. Fan speed stays constant. Setting changes amount of heat output only.	1. Heater is operating correctly.
Heating element does not glow red.	1. Heating element is made of stainless steel and will not glow red to produce heat.	1. Heater is operating correctly.
Do not feel heat or air flow.	1. No power to heater. 2. Desired room temperature reached. 3. Heater does not heat area in front of heater, it will disperse heat throughout room to heat entire space.	1. Check power connections / connect heater to power supply. 2. Thermostat will shut off once desired room temperature is reached. Heater is operating correctly. 3. Heater is operating correctly.

© 2017, Obelis S.A Registered Address:
Bd.Général Wahis, 53, 1030 Brussels, Belgium

Exploded View

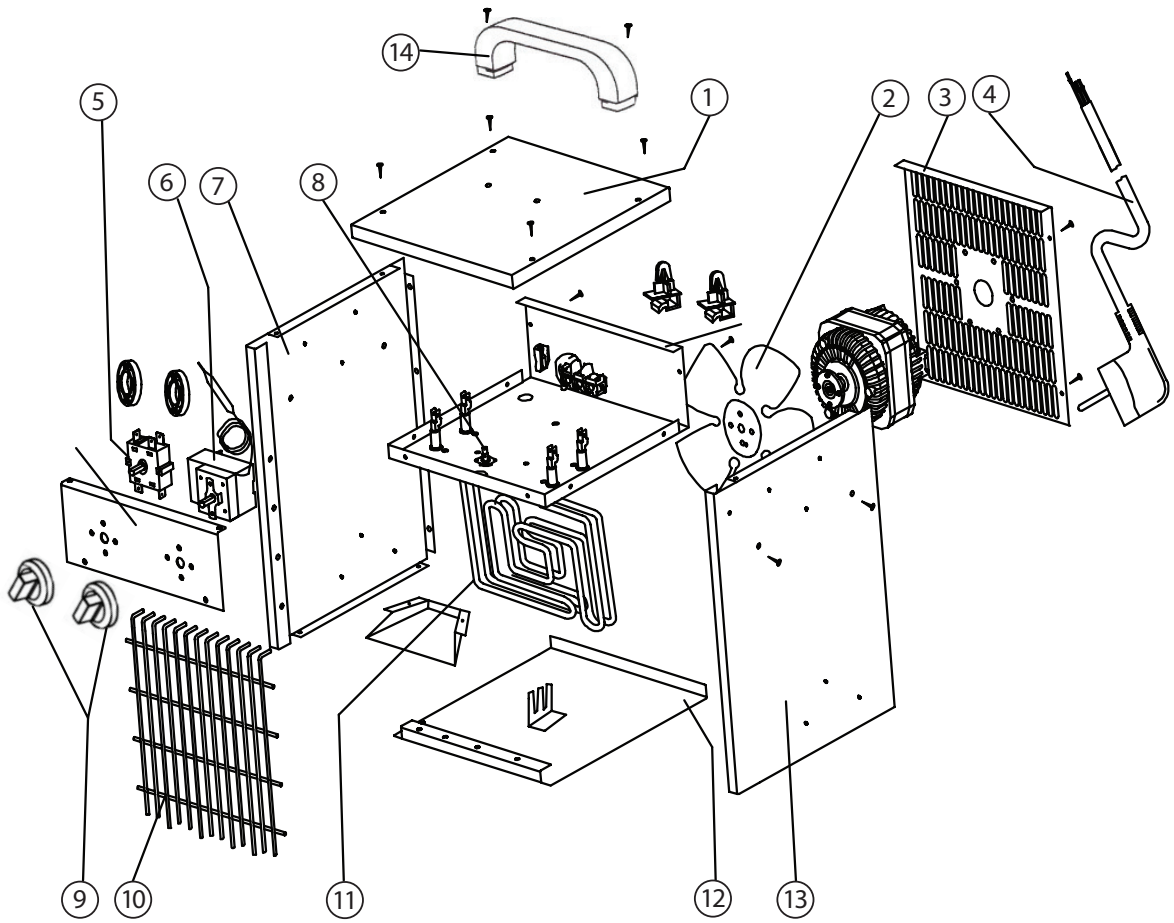

Parts List

	PT-02-230-EU / PT-02-240-EU / PT-03-230-EU / PT-033-230-EU / PT-05-400-EU / PT-09-400-EU
1	Top
2	Fan Blade
3	Rear Guard
4	Power Cord
5	Switch
6	Thermostat
7	Left Side Panel
8	Safety Thermostat
9	Knob
10	Front Guard
11	Heating Element
12	Base
13	Right Side Panel
14	Handle

© 2017, Obelis S.A Registered Address:
Bd.Général Wahis, 53, 1030 Brussels, Belgium

PROTEMP
®

© 2017, Obelis S.A Registered Address:
Bd.Général Wahis, 53, 1030 Brussels, Belgium