BULL USA®

DRIVELINE

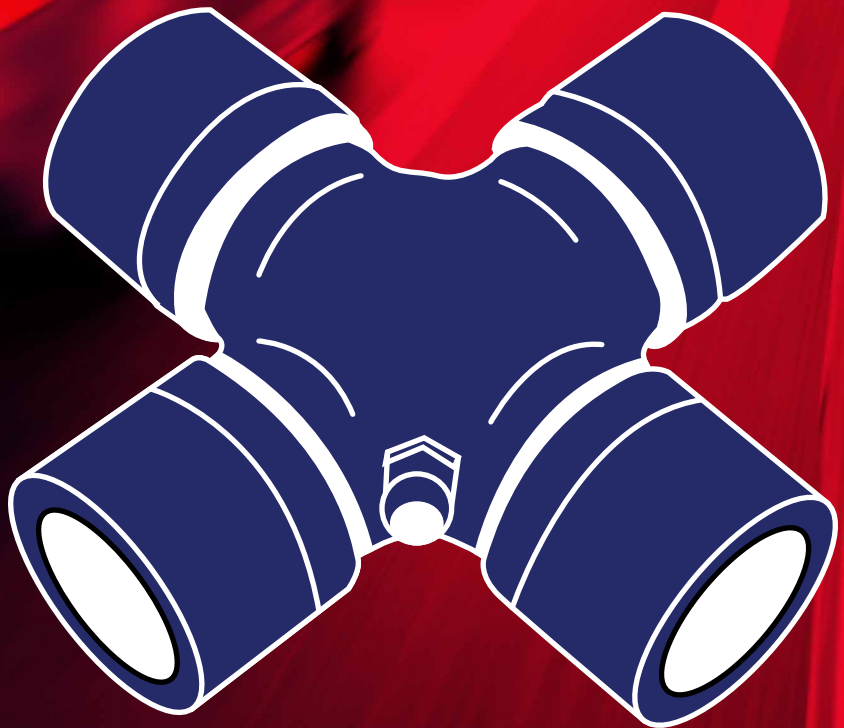

Product Catalog
BL-CD02

www.sapcorp.net

TABLE OF CONTENTS

Universal Joint Styles - Drawings 4

Type A - OSR (Outside Snap Ring) 6

Type B - ISR (Inside Snap Ring) 7

Type AB - OSR (Outside Snap Ring) / ISR (Inside Snap Ring) 8

Type C - BP (Bearing Plate)/ WB (Wing Bearing) 8

Type D - HR (Half Round) 9

Type E - BP (Bearing Plate) 9

Type G - WB (Wing Bearing) 10

Type Meritor - OSR (Outside Snap Ring) 10

Type SPL - SPL (Spicer Life Series) / THDPLT (Threaded Plate) 11

Type Steering 11

Center Support Bearings 12

Interchanges 13

SAP USA Truck & Auto Parts® provides its website, catalog, handbooks and any other materials or electronic media for your general guidance. While SAP has made extensive efforts to make our material as accurate as possible, SAP does not guarantee that this information is complete and accurate and individuals assume any risks associated with relying upon information without checking other credible sources such as verification with our sales team. The numbers used for cross reference and the photos provided are for informational purposes only. All brands and references listed in the catalog belong to the respective companies. SAP USA Truck & Auto Parts® reserves the right to change this catalog and information herein without notice.
2017 © SAP USA Truck & Auto Parts. All rights reserved.

OTHER PRODUCTS WE OFFER

BLUE LIGHT DUTY DIVISION

RED HEAVY DUTY DIVISION

Sap USA
TRUCK & AUTO PARTS
Since 1983

HEAVY DUTY TRUCK & TRAILER DIVISION

- Air Brake & Components
- Air Brake Tubing & Hoses
- Brake Drums
- Brake Shoes
- Heavy Duty Clutch
- Magnetic Sensors
- RTV Silicone
- Trailer Components
- Wheel Oil Seals & Hubcaps

FUEL PUMP DIVISION

- Fuel Pumps
- Filters
- Modules

HYDRAULIC CLUTCH DIVISION

- Actuators
- Master & Slave Cylinders

buffalo USA

SUSPENSION & STEERING DIVISION

- King Bolt Sets
- Power Steering Pumps
- Shock Absorbers
- Tandem Bushings
- Tie Rod Ends

BULL USA

DRIVELINE DIVISION

- Universal Joints
- Center Support Bearings

GAMMA ELECTRIC USA

ELECTRICAL DIVISION

- Alternators
- Ignition Coils
- Starters
- Component Parts
- Electrical Tape

MWP QUALITY NEW CLUTCHES

LIGHT DUTY CLUTCH DIVISION

- Automotive Clutch

T&T

COOLING DIVISION

- Water Pumps

For more information about our products contact us at:

+1 305 594 2844 | info@sapcorp.net | www.sapcorp.net

UNIVERSAL JOINTS STYLES

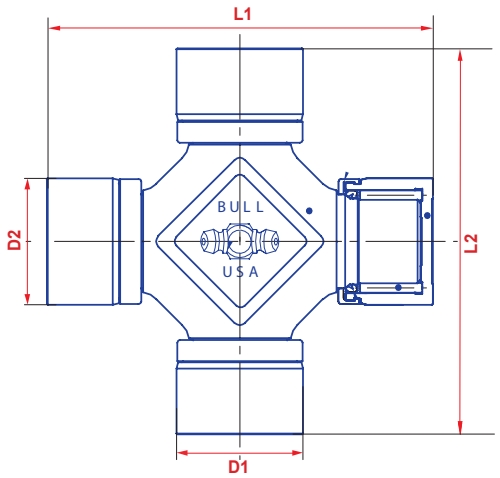

Type A - Style OSR

*** OSR (Outside Snap Ring)**

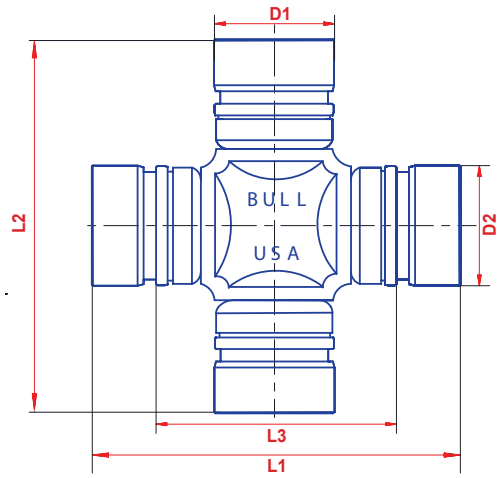

Type B - Style ISR

*** ISR (Inside Snap Ring)**

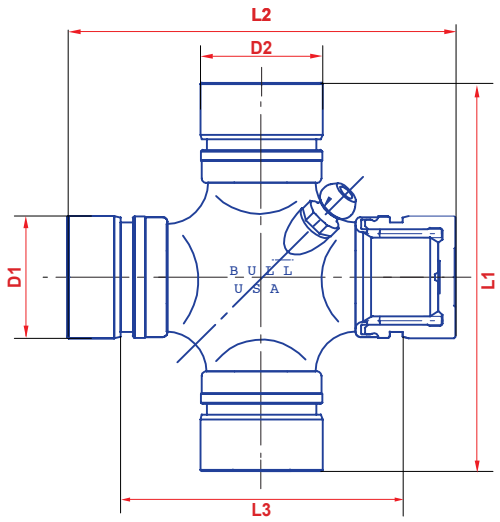

Type A/B - Style ISR/OSR

*** ISR (Inside Snap Ring), * OSR (Outside Snap Ring)**

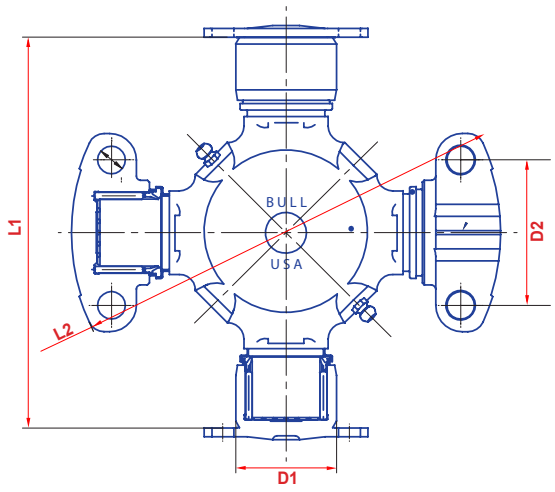

Type C - Style BP/WP

*** BP (Bearing Plate), * WB (Wing Bearing)**

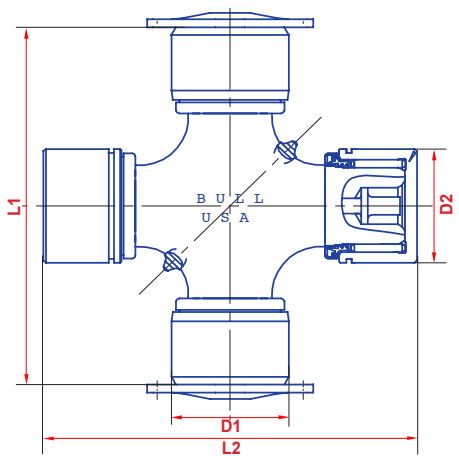

Type D - Style HR

*** HR (Half Round)**

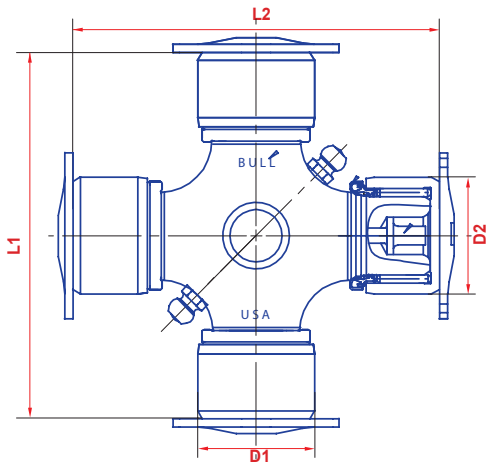

Type E - Style BP

*** BP (Bearing Plate)**

UNIVERSAL JOINTS STYLES

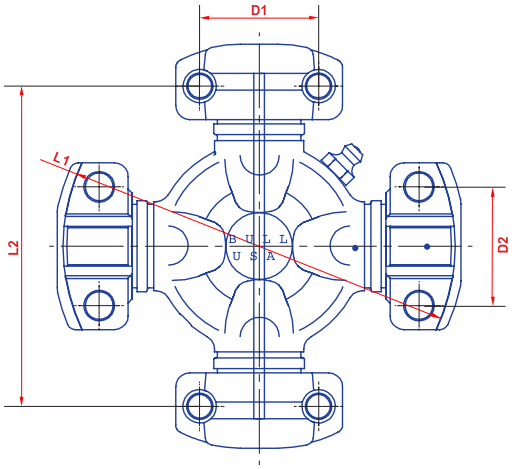

Type G - Style WB

*** WB (Wing Bearing)**

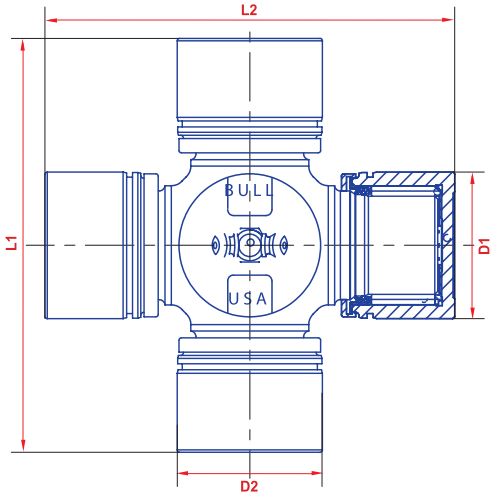

Type SPL - Style SPL/THDPLT

*** SPL (Spicer Life Series) , * THDPLT (Threaded Plate)**

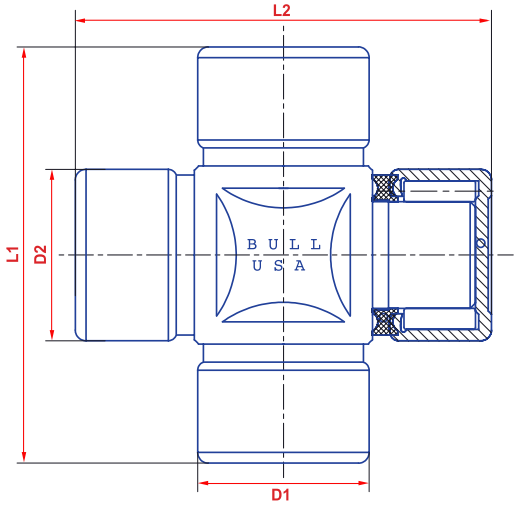

Type Steering

Type
A
Style
OSR
*** OSR (Outside Snap Ring)**

BULL No	D1 (mm.)	D2 (mm.)	L1 (mm.)	L2 (mm.)	NEAPCO	PRECISION	SPICER
BL-GUT24	22.06	22.06	57.50	57.50	Toyota # 04371-13020		
BL-SPL90 (Supersedes BL-SPL100)	41.28	41.28	126.00	126.00		460	SPL90X, SPL100-1X
BL0004100231	53.00	53.00	135.00	135.00	Mercedes # 9424100131		0004100231 0004101628
BL12062	48.05	48.05	161.00	161.00			5-12062X
BL12072	57.00	57.00	164.00	164.00			5-12072X
BL12100	45.00	45.00	120.40	120.40			5-12100X
BL12276	44.00	44.00	149.00	149.00			5-12276X
BL329	27.00	27.00	81.78	81.78	1-0200	329	5-153X, 5-1310X
BL32N	35.50	35.50	119.00	119.00	Nissan # 37125-58026		
BL330	30.19	30.19	106.35	106.35	2-0054	330	5-160X, 5-462X
BL331	30.19	30.19	92.08	92.08	2-0053	331	5-178X, 5-1350X
BL340	23.82	23.82	61.30	61.30	1-0300	340	5-101X, 5-102X
BL341	23.82	23.82	61.30	61.30	1-0300	340	5-101X, 5-102X
BL344	27.00	27.00	74.60	74.60	1-0005	344	5-4X
BL348	27.00	30.19	92.08	81.80	3-3140	348	5-648X
BL351	34.93	34.93	106.31	106.31	3-0188	351	5-188X
BL353	27.00	27.00	92.08	81.78	1-0134	353	5-134X
BL354	27.00	27.00	92.00	92.00	2-4800	354	5-213X , 5-1330X
BL358	34.93	34.93	126.22	126.22	3-0155	358	5-155X
BL369	27.00	27.00	81.78	81.78		369	5-153X , 5-1310X
BL370	39.67	39.67	115.87	115.87		370	
BL380	27.00	27.00	81.78	81.78	1-0154	380	5-153X, 5-433-1X
BL382	33.00	33.00	93.00	93.00		382	
BL395	20.01	20.01	56.99	56.99	1-0011	395	
BL398	25.00	25.00	63.80	63.80	1-1557	398	5-1503X
BL399	25.00	25.00	76.12	76.12			5-1516X
BL437G	27.00	27.00	61.93	61.93	1-0443	437G	5-443X
BL448	27.00	30.19	92.08	92.08	2-3050	448	5-460X
BL462	40.00	40.00	115.00	115.00		462	
BL84	28.01	28.01	80.00	80.00	Toyota/Daihatsu # 04371-87303		
BL964	31.75	31.75	81.40	81.40	2-2275	964	5-243X

Type
B

Style
ISR

*** ISR (Inside Snap Ring)**

BULL No	D1 (mm.)	D2 (mm.)	L1 (mm.)	L2 (mm.)	L3 (mm.)	NEAPCO	PRECISION	SPICER
BL12213	38.00	38.00			62.30			
BL304	31.30	31.30			76.40	3-0056	304	5-1301X
NEW BL3071	30.00	30.00			71.20	Mitsubishi MR165561, J2925014, MR377128		
BL315G	27.40	27.40			53.80	1-6301	315G	5-1306X
BL316	28.60	28.60	92.36	92.36	66.96	2-1175	316	5-811X , 5-1309X
BL317	27.40	27.40	81.80	81.80	53.80	1-6300	317	5-1306-1X
BL338	23.83	23.83	59.85	59.85	37.85	1-0170	338	5-103X, 5-170X
BL356	27.00	27.00			55.50	1-0174	356	5-260X
BL365	27.00	27.00			55.50	1-0174	365	5-260X
BL371	30.20	30.20	81.78	81.78	55.50	1-0297	371	5-297X, 5-760X
BL377	30.20	30.20			55.50		377	5-297X-1
BL383	29.00	29.00			53.00	2-0383	383	5-1515X
BL384	28.00	28.00	80.00	80.00	59.00	1-1610	384	5-1507X
BL386	26.50	26.50			50.80	1-1608	386	5-1513X
BL387	29.00	29.00			52.00	1-1216	387	5-1510X
BL389	32.00	32.00			64.00	2-0020	389	5-1511X
BL390	26.00	26.00			56.00	1-0012	390	5-1508X
BL391	25.02	25.02			44.00	1-0027	391	5-1501X
BL393	28.02	28.02			56.10	1-0029	393	5-1505X
BL433	27.00	27.00			70.60	2-4800	433	5-213X
BL436	27.00	27.00			41.38		436	5-456X
BL446	27.00	27.00			49.00		446	
BL492	28.60	28.60			65.00	2-3011	492	5-795X
BL507	25.40	25.40			59.50	1-3600	507	5-2011X
BL514G	25.40	25.40	63.80	63.80	40.14		514	5-105X
BL534G	28.60	28.60			62.10	2-3011	534G	5-3147X
BL861	24.60	24.60			36.60	1-1475	861	5-92X
BL93M	30.00	30.00	85.00	85.00	55.49	2-0151		
BL995	27.04	27.04	63.76	63.76	46.00	1-1275	995	5-242X

Type
AB
Style
ISR/OSR

* ISR (Inside Snap Ring)
* OSR (Outside Snap Ring)

BULL No	D1 (mm.)	D2 (mm.)	L1 (mm.)	L2 (mm.)	L3 (mm.)	NEAPCO	PRECISION	SPICER
BL319	27.00	27.40	81.78	81.78	53.80	2-3100	319	5-353X, 5-788X
BL355	27.00	28.60	92.00	92.00	64.80	2-1569	355	5-212X
BL361	25.42	27.00	61.95	61.95	43.60	1-0248	361	5-248X
BL372	27.00	28.60	81.78	92.00	65.00	3-3130	372	5-3022X
BL430	27.00	28.60	81.60	81.60	59.50	1-4635	430	5-1201X, 5-7439X
BL434	27.00	28.60	92.00	92.00	70.60	2-4900	434	5-1204X
BL447	30.17	28.57	91.99	65.02			447	

UNIVERSAL JOINTS TYPE C

Type
C
Style
BP/WP

* BP (Bearing Plate)
* WB (Wing Bearing)

BULL No	D1 (mm.)	D2 (mm.)	L1 (mm.)	L2 (mm.)	NEAPCO	PRECISION	SPICER
BL480	49.20	71.40	191.86	209.52	6-0324	480	5-324X
BL488	55.57	71.42	205.58	209.55	6-0326	488	5-326X

UNIVERSAL JOINTS TYPE D

Type D

Style HR

*** HR (Half Round)**

BULL No	D1 (mm.)	D2 (mm.)	L1 (mm.)	L2 (mm.)	NEAPCO	PRECISION	SPICER
BL475	47.62	47.62	135.00	135.00	4-2791	475	5-674X
BL476	49.20	49.20	154.80	157.10	5-2801	476	5-515X, 5-675X
BL477	49.20	49.20	179.98	177.98	6-0677	477	5-469X, 5-677X
BL478	49.20	49.20	194.00	191.86		478	5-510X, 5-676X

UNIVERSAL JOINTS TYPE E

Type E

Style BP

*** BP (Bearing Plate)**

BULL No	D1 (mm.)	D2 (mm.)	L1 (mm.)	L2 (mm.)	NEAPCO	PRECISION	SPICER
BL333	47.62	47.62	135.03	135.03	4-0279	333	5-279X
BL334	49.20	49.20	154.86	154.86	5-0280	334	5-280X
BL335	58.98	58.98	167.58	167.58	6-0124	335	5-124X
BL376	49.20	49.20	177.93	177.93	6-0407	376	5-407X
BL381	49.20	49.20	191.86	191.86	6-0281	381	5-281X

Type G

Style WB

*** WB (Wing Bearing)**

BULL No	D1 (mm.)	D2 (mm.)	L1 (mm.)	L2 (mm.)	NEAPCO	PRECISION	SPICER
BL560	42.80	42.80	140.20	114.20	4-5122	560	5-6000X
BL563	42.80	42.80	140.20	114.20	4-6114	563	5-6102X, 6C-9X
BL7100	49.22	49.22	148.43	148.43	5-7205	570	5-7000X
BL905	42.80	42.80	140.20	114.20	4-6128	905	5-6106X
BL951	33.34	33.34	79.00	59.54	1-2171	951	5-2002X

UNIVERSAL JOINTS TYPE MERITOR

Type Meritor

Style OSR

*** OSR (Outside Snap Ring)**
RPL - HWD

BULL No	D1 (mm.)	D2 (mm.)	L1 (mm.)	L2 (mm.)	NEAPCO	MERITOR
BL-CP20RPLS	52.32	52.32	134.62	174.75	6-0020	CP20RPLS
BL-CP25RPLS	52.32	52.32	168.40	208.28	6-0025	CP25RPLS

Type SPL

Style SPL/THDPLT

* SPL (Spicer Life Series)
* THDPLT (Threaded Plate)

BULL No	D1 (mm.)	D2 (mm.)	L1 (mm.)	L2 (mm.)	NEAPCO	VOLVO	SPICER
BL-SPL140	49.20	49.20	138.80	138.80			SPL140X
BL-SPL170	55.00	55.00	164.20	164.20	6-1170	3947697	SPL170X SPL170X-3X
BL-SPL250	60.00	60.00	163.20	163.20	6-1250	3947698	SPL250X SPL250X-3X
BL1651032	50.05	50.05	152.70	152.70		1651032	
BL1651229	57.07	57.07	152.80	152.80		1651229	

UNIVERSAL JOINTS TYPE STEERING

Type Steering

BULL No	D1 (mm.)	D2 (mm.)	L1 (mm.)	L2 (mm.)
BL15-38ST	15.05	15.05	38.00	38.00
BL15-40ST	15.00	15.00	40.00	40.00
BL16-38ST	16.05	16.05	38.00	38.00
BL16-39ST	16.05	16.05	39.00	39.00
BL16-40ST	16.03	16.03	38.50	38.50
BL19-48ST	19.06	19.06	47.60	47.60

Style
Slip-Yoke Tube

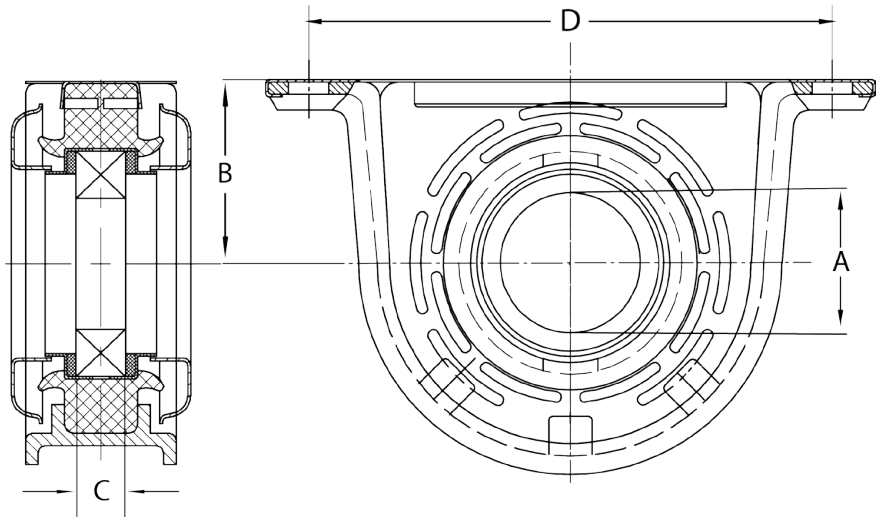

				A	B	C	D	
BULL No	BEARING ONLY	RUBBER ONLY	APPLICATION	BEARING INSIDE	HEIGHT	BEARING WIDTH	MOUNTING HOLES	CROSS REFERENCE
BL5-37510-008-0			Isuzu ELF (NPR/NKR/NHR)	32.00	65.00	20.00	158.40	5-37510-008-0
NEW BL5003323			Kenworth, Ford, IHC9300, Chevrolet Super Brigadier	60.00	84.58	35.71	218.99	5003323
BL88107A			Isuzu NPR/NKR	40.00	56.50	22.24	168.12	902010T-X
BL88107ACS		BL88107AR	Ford 100/350, Dodge 100/300	35.00	56.50	24.95	167.30	210088-1X
BL88508ACS	BL88508AB	BL88508AR	Agrale / Ford cargo 850 / B-60 / C-70	40.00	60.00	27.01	168.10	210391-1X
BL88509ACS	BL88509AB	BL88509AR	B60 / F950 / P900	45.00	68.26	26.98	168.21	210084-2X
BL88510ACS	BL88510AB	BL88510AR	Kodiak 240 / 209 Diesel / 211 Diesel	50.00	71.43	30.02	193.67	210121-1X
BL88512ACS	BL88512AB	BL88512AR	Kenworth, Ford, IHC9300, Chevrolet Super Brigadier	60.00	85.85	35.71	218.94	210661-1X

*Measurements in millimeters

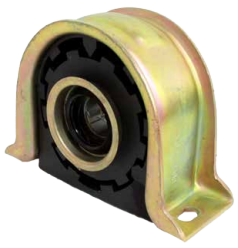

BL5-37510-008-0

NEW

BL5003323

BL88107A

BL88107ACS

BL88508ACS

BL88509ACS

BL88510ACS

BL88512ACS

Vendor No	SAP No
GMB	
G5-103X	BL338
G5-1201X	BL430
G5-1203	BL354
G5-1203X	BL433
G5-1204	BL434
G5-124X	BL335
G5-1301X	BL304
G5-1306-1X	BL317
G5-1306HD	BL315G
G5-1309X	BL316
G5-188X	BL351
G5-2011X	BL507
G5-242X	BL995
G5-248X	BL361
G5-260X	BL365
G5-273X	BL433
G5-279X	BL333
G5-280X	BL334
G5-281X	BL381
G5-297X	BL371
G5-297X1	BL377
G5-3009X	BL355
G5-3105X	BL534G
G5-324X	BL480
G5-352X	BL353
G5-353X	BL319
G5-356X	BL372
G5-358X	BL348
G5-3999X	BL534G
G5-407X	BL376
G5-456X	BL436
G5-5000X	BL560
G5-6106X	BL905
G5-7000X	BL7100
GGPL-12R	BL995
GGPL-35R	BL964
GGPL-6R	BL861
GU-100	BL329
GU-1100	BL344
GU-2000	BL356
GU-2050	BL330
GU-3000	BL437G
GU-400	BL340
GU-400	BL341
GU-500	BL340
GU-500	BL341
GU-700	BL338
GUIS-52	BL383
GUM-81	BL398
GUM-93	BL93M

Vendor No	SAP No
GMB	
GUM99	BL3071
GUMZ-10	BL385
GUMZ-6	BL384
GUMZ-9	BL386
GUN-27	BL391
GUN-29	BL393
GUN-30	BL331
GUT-11	BL395
GUT-12	BL390
GUT-20	BL389
INTERNATIONAL	
2500678C91	BL-SPL170
2500680C91	BL-SPL250
ISUZU	
5-37510-008-0	BL5-37510-008-0
MERCEDES	
0004100231	BL0004100231
0004101628	BL0004100231
9424100131	BL0004100231
MITSUBISHI	
J2925014	BL3071
MR165561	BL3071
MR377128	BL3071
NEAPCO	
1-0005	BL344
1-0011	BL395
1-0012	BL390
1-0027	BL391
1-0029	BL393
1-0134	BL353
1-0154	BL380
1-0170	BL338
1-0174	BL356
1-0174	BL365
1-0200	BL329
1-0248	BL361
1-0297	BL371
1-0300	BL340
1-0300	BL341
1-0443	BL437G
1-1216	BL387
1-1275	BL995
1-1475	BL861
1-1557	BL398
1-1604	BL385
1-1608	BL386
1-1610	BL384

Vendor No	SAP No
NEAPCO	
1-2171	BL951
1-3600	BL507
1-4635	BL430
1-6300	BL317
1-6301	BL315G
2-0020	BL389
2-0053	BL331
2-0054	BL330
2-0151	BL93M
2-0383	BL383
2-1175	BL316
2-1569	BL355
2-2275	BL964
2-3011	BL534G
2-3050	BL448
2-3100	BL319
2-3111	BL492
2-4800	BL354
2-4800	BL433
2-4900	BL434
3-0056	BL304
3-0155	BL358
3-0188	BL351
3-3130	BL372
3-3140	BL348
4-0279	BL333
4-2791	BL475
4-5122	BL560
4-6114	BL563
4-6128	BL905
5-0280	BL334
5-2801	BL476
5-7205.	BL7100
6-0020	BL-CP20RPLS
6-0025	BL-CP25RPLS
6-0124	BL335
6-0281	BL381
6-0324	BL480
6-0326	BL488
6-0407	BL376
6-0677	BL477
6-1170	BL-SPL170
NISSAN	
37125-58026	BL32N
PRECISION	
304	BL304
316	BL316
317	BL317
319	BL319

Vendor No	SAP No
PRECISION	
329	BL329
330	BL330
331	BL331
333	BL333
334	BL334
335	BL335
338	BL338
340	BL340
341	BL341
344	BL344
348	BL348
351	BL351
353	BL353
354	BL354
355	BL355
356	BL356
358	BL358
361	BL361
365	BL365
369	BL369
370	BL370
371	BL371
372	BL372
376	BL376
377	BL377
380	BL380
381	BL381
382	BL382
383	BL383
384	BL384
385	BL385
386	BL386
387	BL387
389	BL389
390	BL390
391	BL391
393	BL393
395	BL395
398	BL398
430	BL430
433	BL433
434	BL434
436	BL436
446	BL446
447	BL447
448	BL448
460	BL-SPL90
462	BL462
475	BL475
476	BL476

Vendor No	SAP No
PRECISION	
477	BL477
478	BL478
480	BL480
488	BL488
492	BL492
507	BL507
514	BL514G
560	BL560
563	BL563
570	BL7100
861	BL861
905	BL905
951	BL951
964	BL964
995	BL995
315G	BL315G
437G	BL437G
534G	BL534G
SPICER	
5003323	BL5003323
210084-2X	BL88509ACS
210088-1X	BL88107ACS
210121-1X	BL88510ACS
210391-1X	BL88508ACS
210661-1X	BL88512ACS
5-101X	BL340
5-101X	BL341
5-102X	BL340
5-103X	BL338
5-105X	BL514G
5-1201X	BL430
5-1204X	BL434
5-12062X	BL12062
5-12072X	BL12072
5-12100X	BL12100
5-12276X	BL12276
5-124X	BL335
5-1301X	BL304
5-1306-1X	BL317
5-1306X	BL315G
5-1309X	BL316
5-1310X	BL329
5-1310X	BL369
5-1330X	BL354
5-134X	BL353
5-1350X	BL331
5-1501X	BL391
5-1503X	BL398
5-1505X	BL393

Vendor No	SAP No
SPICER	
5-1507X	BL384
5-1508X	BL390
5-1510X	BL387
5-1511X	BL389
5-1513X	BL386
5-1514X	BL385
5-1515X	BL383
5-1516X	BL399
5-153X	BL329
5-153X	BL369
5-153X	BL380
5-155X	BL358
5-160X	BL330
5-170X	BL338
5-178X	BL331
5-188X	BL351
5-2002X	BL951
5-2011X	BL507
5-212X	BL355
5-213X	BL354
5-213X	BL433
5-242X	BL995
5-243X	BL964
5-248X	BL361
5-260X	BL356
5-260X	BL365
5-279X	BL333
5-280X	BL334
5-281X	BL381
5-297X	BL371
5-297X-1	BL377
5-3022X	BL372
5-3147X	BL534G
5-324X	BL480
5-326X	BL488
5-353X	BL319
5-407X	BL376
5-433-1X	BL380
5-443X	BL437G
5-456X	BL436
5-460X	BL448
5-462X	BL330
5-469X	BL477
5-481X	BL330
5-4X	BL344
5-510X	BL478
5-515X	BL476
5-6000X	BL560
5-6102X	BL563
5-6106X	BL905

Vendor No	SAP No
SPICER	
5-648X	BL348
5-674X	BL475
5-675X	BL476
5-676X	BL478
5-677X	BL477
5-7000X	BL7100
5-7439X	BL430
5-760X	BL371
5-788X	BL319
5-795X	BL492
5-811X	BL316
5-92X	BL861
6C-9X	BL563
902010T-X	BL88107A
CP20RPLS	BL-CP20RPLS
CP25RPLS	BL-CP25RPLS
SPL100-1X	BL-SPL90
SPL140X	BL-SPL140
SPL170X	BL-SPL170
SPL170X-3X	BL-SPL170
SPL250X	BL-SPL250
SPL250X-3X	BL-SPL250
SPL90X	BL-SPL90
TOYO	
TM199	BL3071
TOYOTA	
04371-13020	BL84
04371-87303	BL84
VOLVO	
3947697	BL-SPL170
3947698	BL-SPL250
1651032	BL1651032
1651229	BL1651229

Sap
USA
TRUCK & AUTO PARTS
Since 1983

buffalo
USA

BULL
USA

GAMMA
ELECTRIC
USA

MWP
QUALITY NEW CLUTCHES

T&T

BEHR
SERVICE

Bendix

DAYCO

Delco
Remy

DETROIT

Donaldson

EATON

FTE
automotive

Gabriel
SHOCK ABSORBERS

HENDRICKSON

Pollak

Prestolite
electric

SKF

SPICER

WALBRO

TRUCK & AUTO PARTS
Since 1983

www.sapcorp.net

5301 NW 74 Ave Miami, Florida 33166
Phone: +1 305 594 2844 | Fax: +1 305 599 2351
Email: info@sapcorp.net

Catalog BL-CD02 (Supersedes Catalog BL-CD01)